GumNaaM_Helpers

Mega File for MiD TerM

All Files in ONE FILE

(Handouts_waqar_moaz_junaid_vu toper_orange monkey)

Alhamdulillah GumNaaM_Helpers Bs..IT/CS ky Tamam Semesters ki tamam Books ki help krty hn.

Group Join krty hi description Read krna na bholyn

Semester Name	Group Link
Bs..IT/CS...smstr:1	https://chat.whatsapp.com/Ciya2X0DI0l8iQ14m0VNNj
Bs..IT/CS...smstr:2	https://chat.whatsapp.com/Kwh85sRK02z1Qk5B7aMR19
Bs..IT/CS...smstr:3	https://chat.whatsapp.com/IjIpdzi8pIA4lQVNUMmNYE
Bs..IT/CS...smstr:4	https://chat.whatsapp.com/CiGpHsSftir0oyhM47WfKh
Bs..IT/CS...smstr:5	https://chat.whatsapp.com/Hf7NWhdW06uCW7Mbt1n4Db
Bs..IT/CS...smstr:6	https://chat.whatsapp.com/DyAoT7VFkwy8DuvryDqm2L
Bs..IT/CS...smstr:7	https://chat.whatsapp.com/ENiyfIDRWatJFPbXCUGYNN
Bs..IT/CS...smstr:8	https://chat.whatsapp.com/Bnkk4n7utpdEuXazHLxRcA

...Paid Service Available for LMS Activities...

Only for those students who are so busy in office or work or job that they can't watch their LMS due to their Busyness

FOR MORE INFO. CONTACT US ONLY WHAT'S APP 0302-1500025

COMPUTER NETWORKS

(CS610)

HANDOUTS

LECTURERS # 01 – 45

PREPARED BY:

HAMMAD KHALID KHAN

© Copyright Virtual University of Pakistan

Table of contents

Lecture No. 1 ..... **4**
INTRODUCTION 4
Lecture No. 2 ..... **9**
Motivation and Tools 9
Lecture No. 3 ..... **13**
Overview of Data Communication 13
Lecture No. 4 ..... **14**
PACKETS, FRAMES AND ERROR DETECTION 14
PACKETS AND TDM: **15**
Figure 4.2 illustration of TDM 16
Lecture No. 5 ..... **17**
BYTE STUFFING 17
Lecture No. 6 ..... **22**
SHIFT OPERATION 22
Lecture No. 7 ..... **24**
GROWTH OF LAN TECHNOLOGY 24
Lecture No. 8 ..... **28**
CARRIER SENSE MULTIPLE ACCESS (CSMA) 28
Lecture No. 9 ..... **33**
HARDWARE ADDRESSING 33
Lecture No. 10 ..... **35**
FRAME TYPE IDENTIFICATION 35
Lecture No. 11 ..... **39**
INTERFACE HARDWARE 39
Lecture No. 12 ..... **43**
LAN WIRING AND PHYSICAL TOPOLOGY 43
Lecture No. 13 ..... **48**
FIBER MODEMS AND REPEATOERS 48
Lecture No. 14 ..... **51**
BRIDGES 51
Lecture No. 15 ..... **54**
SWITCHES AND WAN TECHNOLOGIES 54
Lecture No. 16 ..... **58**
ROUTING 58
Lecture No. 17 ..... **62**
ROUTING ALGORITHMS 62
Lecture No. 18 ..... **66**
CONNECTION-ORIENTED NETWORKING AND ATM 66
Lecture No. 19 ..... **68**
ATM: VIRTUAL CIRCUITS 68
Lecture No. 20 ..... **72**
ATM AND NETWORK OWNERSHIP 72
Lecture No. 21 ..... **75**
NETWORK SERVICE PARADIGM 75
Lecture No. 22 ..... **79**
NETWORK PERFORMANCE 79

© Copyright Virtual University of Pakistan

Lecture No. 23 81
INTERNETWORKING: CONCEPTS, ARCHITECTURE AND PROTOCOLS 81
Lecture No. 24 85
IP: INTERNET PROTOCOL ADDRESSES 85
Lecture No. 25 87
INTERNET PROTOCOL ADDRESS NOTATIONS 87
Lecture No. 26 90
IP SUBNETING 90
Lecture No. 27 93
ADDRESS REOLUTION PROTOCOL (ARP) 93
Lecture No. 28 97
ARP MESSAGE FORMAT 97
Lecture No. 29 101
IP DATAGRAMS AND DATAGRAM FORWARDING 101
Lecture No. 30 105
IP ENCAPSULATION, FRAGMENTATION AND REASSEMBLY 105
Lecture No. 31 110
THE FUTURE IP (IPV6) 110
Lecture No. 32 113
IPv6 AND AN ERROR REPORTING MECHANISM 113
Lecture No. 33 117
AN ERROR REPORTING MECHANISM (ICMP) 117
Lecture No. 34 119
UDP: DATAGRAM TRANSPORT SERVICE 119
Lecture No. 35 122
DATAGRAM FORMAT AND TCP: RELIABLE TRANSPORT SERVICE 122
Lecture No. 36 125
TCP: RELIABLE TRANSPORT SERVICE (Cont.) 125
Lecture No. 37 128
NETWORK ADDRESS TRANSLATION (NAT) 128
Lecture No. 38 131
NETWORK ADDRESS TRANSLATION 131
Lecture No. 39 133
IP ROUTING (Part-1) 133
Lecture No. 40 135
IP ROUTING (Part-2) 135
Lecture No. 41 137
IP ROUTING (Part-3) 137
Lecture No. 42 139
IP ROUTING (Part-4) 139
Lecture No. 43 142
IP ROUTING (Part-5) 142
Lecture No. 44 144
IP ROUTING (Part-6) 144
Lecture No. 45 147
COURSE REVISION 147

© Copyright Virtual University of Pakistan

Lecture No. 1

INTRODUCTION

NETWORK:

A network is defined as a system for connecting computers using a single transmission technology. The computers can communicate with each other in a network. They can send and receive data from each other when they are in a network.

INTERNET:

The Internet is defined as the set of networks connected by routers that are configured to pass traffic among any computers attached to any network in the set. By internet many computers which are at longer distances from each other can communicate with each other.

CLASSIFICATION OF NETWORKS

Computer networks are classified by four factors which are as follow:

1) BY SIZE:
2) BY CONNECTIVITY:
3) BY MEDIUM:
4) BY MOBILITY:

Long Q

1) BY SIZE:

According to their size there are two classifications of networks.

1. Local Area Network. (LAN)
2. Wide Area Network (WAN)

In LAN network occupies the smaller area like a room a floor or a building.

In WAN, network occupies larger areas like cities & countries. Internet is a Wide Area Network.
LAN & WAN are compared by the speed of transmission, bandwidth and latency, management, security, reliability, billing and their standards.

© Copyright Virtual University of Pakistan

2) BY CONNECTIVITY:

Networks are also classified by connectivity in which two topologies are discussed.

a) Point-to-Point
b) Broadcast

a) POINT-TO-POINT:

In *Point-to-Point* topology there are two topologies.

1) STAR topology
2) TREE topology

In *star* topology each computer is connected to a central hub. The communication takes place through the hub. It is shown in the figure below.

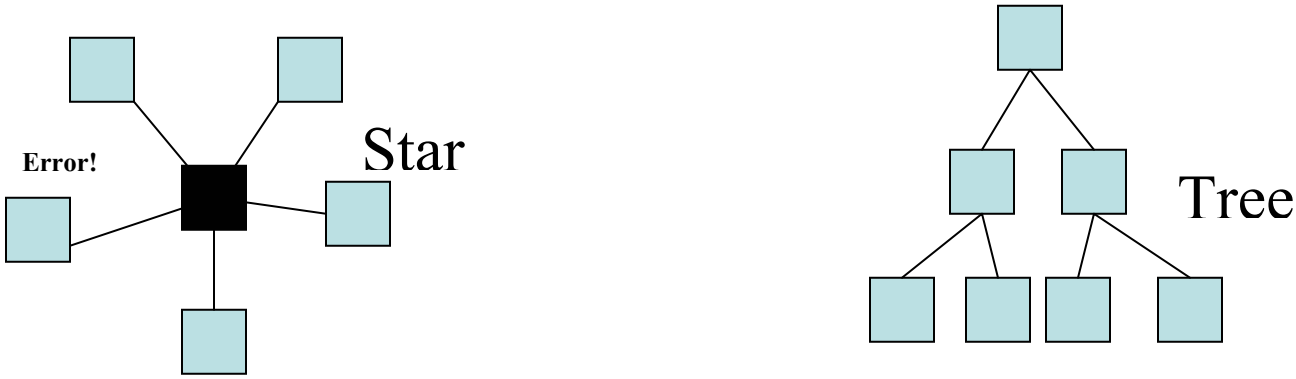

Figure 1.1: star and tree topologies

In Tree topology all computers are connected to each other in such a way that they make a tree as shown in the figure above.

b) BROADCAST:

In broadcast topology there are further two categories

1) SATELLITE\RADIO 2) RING TOPOLOGY

In a satellite or radio topology all computers are connected to each other via satellite or radio wave as shown in the figure.

© Copyright Virtual University of Pakistan

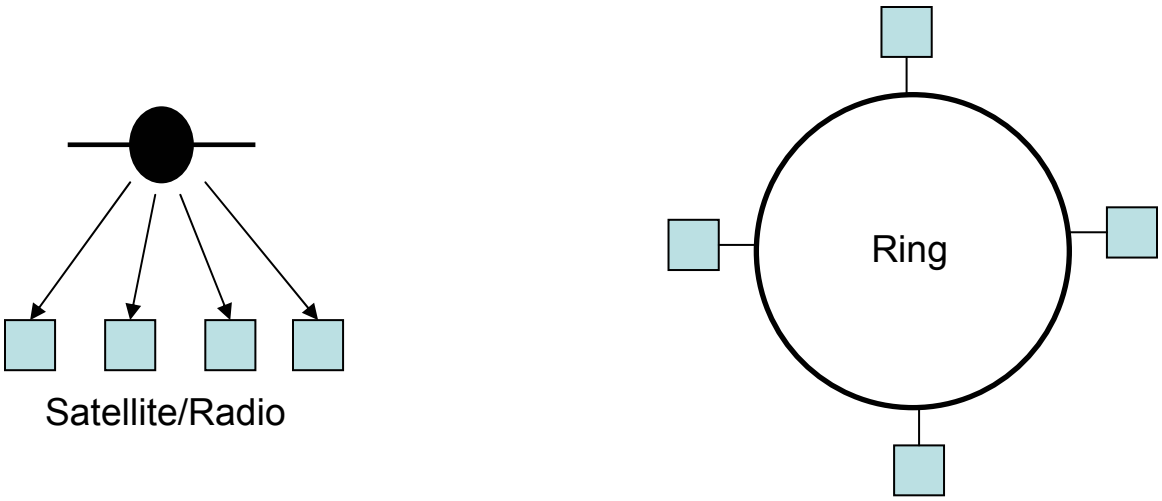

Figure: 1.2 Satellite and Ring topologies: In a ring topology each computer is connected to other thorough a ring as shown in the figure above.

3) BY MEDIUM:

The classification of networks is also based on the Medium of transmission. Following are the mediums of transmission:

- Copper wire
- Co-axial cable
- Optical fiber
- Radio waves

All these mediums differ from each other with respect different parameters. These parameters are speed of transmission, range of the receiver and transmitter computer, sharing of information, topology, installation & maintenance costs and reliability.
For example the range of radio waves will be much more than an optical fiber. Similarly other mediums differ from each other and appropriate medium is selected for the sake of transmission.

4) BY MOBILITY:

The networks are also classified according to their mobility.
In this respect there are two types of networks.

- Fixed networks
- Mobile networks

In these days mobile networks are the hot case. Mobile networks have been emerged in the last decade. In this regard there are some issues which are attached with the mobility of networks which are as follows:

- Location and tracking
- Semi persistent connections
- Complex administration and billing as devices and users move around the network.

© Copyright Virtual University of Pakistan

NETWORKS IN DAILY LIFE:

The major use of networks is in business side. Networks are used for advertising, production, shipping, planning, billing and accounting purposes. In fact now there is an entire industry that develops networking equipment.

In addition to this networks are being used in homes as well for example, to switch and control different devices from one place.

Networks are very much useful at government level as federal government, local government and military organization use networks for communication purposes.

In education we have online libraries which we can visit at our home PC. This is all just due to the networks.

COMPLEXITY OF NETWORK SYSTEMS:

A computer network is a complex subject due to the following reasons:

- ## MANY DIFFERENT TECHNOLOGIES EXIST:

The first reason for the complexity of networks is that there are many different technologies exist for networking and each technology features is different from the other. This is because many companies have developed networking standards, which are not compatible with each other. In this way multiple technologies exist that are used to connect different networks.

- ## NO SINGLE UNDERLYING THEORY OR MODEL:

The second reason for the complexity of networks is that there is no single underlying theory or model, which specifies or defines different aspects of networking. Rather, various organizations and research groups have developed conceptual models that can be used to explain differences and similarities between network hardware and software.

- ## MODELS ARE EITHER SO SIMPLISTIC OR SO COMPLEX:

Another reason for the complexity of networks is that the conceptual models made by organization are either so simplistic that they do not distinguish between details, or they are so complex that they do not simplify the subject.

- ## NO SIMPLE OR UNIFORM TERMINOLOGY:

One reason for the complexity of networks is that there is no simple or uniform terminology that can be used for the same feature. Different technologies use different terminologies. In this way terms are confused with product names.

© Copyright Virtual University of Pakistan

MASTERING THE COMPLEXITY

To master the complexity one must follow the following points.

• CONCENTRATE IN UNDERSTANDING THE CONCEPTS:

Instead of details of wires used to connect computers to a specific network, it is important to understand a few basic categories of wiring schemes their advantages and disadvantages.
For example:

Instead of how a specific protocol handles congestion, we should concentrate on what congestion is and why it must be handled.

• LEARNING THE NETWORKING TERMINOLOGY:

The second tool for mastering the complexity is to learn the networking terminology. In addition to this one must concentrate the concepts and not details, concentrate on breath and not the depth of technologies, also one should understand the analogies and illustrations
Network terminology is introduced with new concepts so it is much helpful to learn the terminology to overcome the complexity of networks.

© Copyright Virtual University of Pakistan

Lecture No. 2

Motivation and Tools

One of the reasons of motivation towards networking was resource sharing which is discussed as follows.

Resource sharing:

Resource sharing means to share the resources available among many users.
In an office as it is very expensive to give a separate printer to each worker. So if the printer is shared among the workers then a single printer will be accessible to each worker. This leads to the motivation of resource sharing.

Goal of resource sharing:

The goal of resource sharing is to make all programs, equipment and date available to anyone in the network without regard to physical location of the resource and the user.
For example: the sharing of a printer among the workers in an office and also the sharing of information is a goal of resource sharing.

Main reason for early resource sharing:

The main reason for early resource sharing was not to share the peripheral devices rather to share the large-scale computational power because computer were extremely expensive in those days and the government budgets were not sufficient to provide computers for all scientist and engineers. By resource sharing a researcher could use whichever computer was best suited to perform a given task.

Efforts of advanced research project AGENCY (ARPA):

The efforts of ARPA was to enable all its research groups have access to latest computers. For this purpose ARPA started investing in ways to do data networking ARPA use a new approach consisting of packet switching and internetworking to fulfill the purpose of resource sharing. As a result of ARPA research the first network was established which was named ARPANET.
In this way the internet was emerged in 1970's and it has grown drastically since then as shown in the figure below.

© Copyright Virtual University of Pakistan

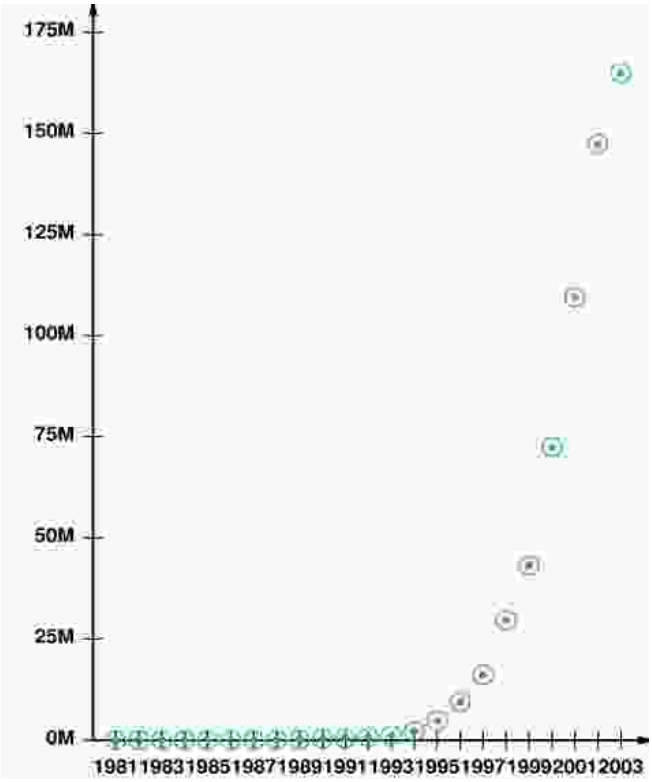

Figure. 2.1 Growth of the Internet

As shown in another figure below. In log scale the position on y-axis is proportional to the log of the number being represented. So the values along y-axis represent the power of 10.

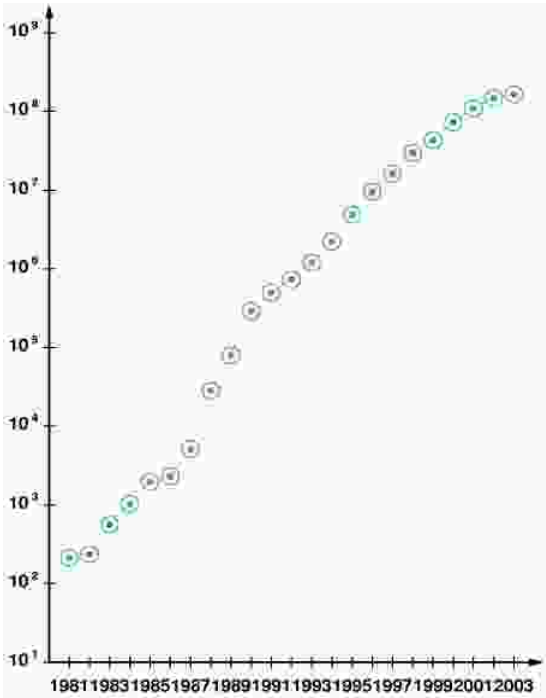

Fig. 2.2 Growth of the internet on Log Scale

© Copyright Virtual University of Pakistan

We see that on log scale the growth appears almost linear it means that internet experienced an exponential growth. We also observed that internet has been doubled every nine to twelve months.

PROBING THE INTERNET:

Let us see how are the figures in above graphs obtained?
In the early days when there were some dozen computers on the network, it was done manually but now as we have seen that there are millions of computers on the internet so how can we calculate the number of computers connected to the internet. This is done through probing the Internet.
Now an automated tool is required that tests to see whether the given computer is online or not. For this purpose the first tool is the `PING program` which is shown in the figure below.

Type text here

Figure 2.3 THE PING Command

We see that 5 packets of 64 bytes are sent to sears.com and 5 packets are received. We see that ping has also given some additional information such the IP addresses of sears.com, the sequence of packets and the times of transmission known as the round-trip time, as there is no packet loss so it means that sears.com is connected to the internet.

PROBLEM WITH 'PING':

Ping, as a tool seems to be simplistic. Now let's see what are the problems attached with ping. If ping does not review any responses from host computer it can not tell the reason of problem. Because one of the following reasons occurs, but ping will not specify the reason.

- Remote computer might have a problem.
- Local computer might have a problem.
- Ping sometimes fails because of congestion.

Some networks or computers reject the ping packets. They do this to avoid denial of service of flooding attack.
Inspite of these problems ping is still heavily used as a diagnostic tool.
Network administrators use ping as soon as they learn about the failure.

Tracing a Route:

There is another probing tool i-e Trace Route. To get more detail it is used.

© Copyright Virtual University of Pakistan

Figure 2.4

As shown in the figure about the route to DANDELION-PATCH.MIT.EDU was traced out and the program showed all eight computers that were in the way. The additional information is also shown in the figure.

Thus we see that tracing a route is more interesting tool than Ping as it tells about each computer that falls in the way of source and destination computers.

© Copyright Virtual University of Pakistan

Lecture No. 3

Overview of Data Communication

NOTE: -

Chapter 4, 5, 6 deals with the course of DATA COMMUNICATION, which has been studied as a separate, course earlier. So these chapters are just overviewed and can be seen in the third lecture video.

It should also be noted that these chapters will contain no assignment, or quizzes and these chapters will also be out of the examination.

© Copyright Virtual University of Pakistan

Lecture No. 4

PACKETS, FRAMES AND ERROR DETECTION

INTRODUCTION:

The previous chapters of data communication described how bits are transmitted across a physical network using a transmission medium.

This chapter introduces the concept of packets of data rather than bits for communication.

CONCEPT OF 'PACKET':

Network systems divide data in small blocks or junks called packets, which they send individually. Why we need packets rather than bits? The answer to this question is because a sender and receiver need to coordinate to detect transmission errors. Also the individual connection between each pair of computers is not possible. That's why to solve these problems shard network connections are made among many workstations.

PROBLEMS WITH SHARING:

The demand of sharing is very high because many computers need to use the shared networks. In addition to this some applications have large data transfer. In this way they hold the network for long time. But on the other hand some applications cannot wait so long. So we need a mechanism for fairness.

SOLUTION FOR FAIRNESS:

To the fairness, the solution is to divide the data into small block or chunks called 'PACKETS'. Computers take turns to send one packet at a time over the shared connection.

Because each packet is small so no computer experiences a long delay.

© Copyright Virtual University of Pakistan

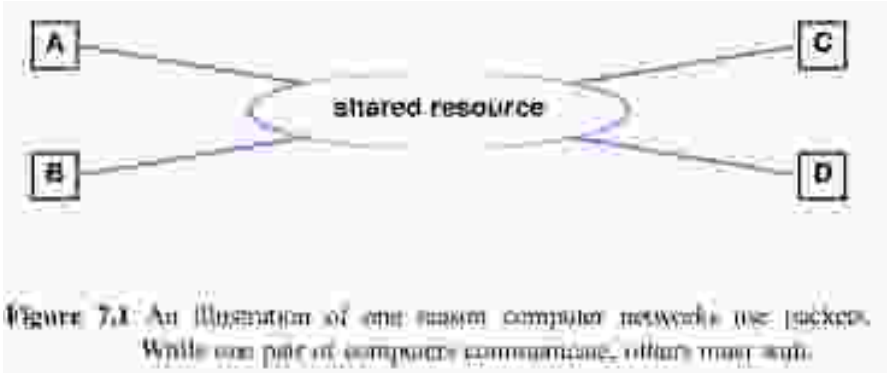

Figure 7.1 An illustration of one reason computer networks use packets. While one pair of computers communicate, others must wait.

Example:

In the figure one reason for using the packets is illustrated. We see that in a shared resource when one pair of computer communicates, the other must wait. To understand the use of packet here, let's suppose a transmission with packets in the figure.

WITHOUT PACKETS:

A 5MB file transferred across network with 56Kpbs capacity will require 12 minutes.
This means that all that computers will be forced to wait for 12 minutes before initiating other transfers.

$$\frac{5x10^6 \text{ bytes } * \text{ 8 bits / byte}}{\text{60 secs / minute } * \text{ } 56x10^3 \text{ bits / second}} = 11.9 \text{ minutes}$$

WITH PACKETS:

Now if the file is broken into packets, other computers must only wait until packet (not entire file) has been sent.
Suppose file is broken into 1000 byte packets.
Now each packet takes less than 0.2 seconds to transmit. Here other computers must only

$$\frac{\text{1000 bytes } * \text{ 8 bits / byte}}{56x10^3 \text{ bits / second}} = .143 \text{ seconds}$$

wait for 0.14 sec before beginning to transmit.
Note: - if both files are 5MB long, each now takes 24 minutes to transmit. But if the second file is 10MB long it sill be transmitted in only 2.8 seconds while 5MB file still takes roughly 12 minutes.

PACKETS AND TDM:

Dividing data into small packets allow time division multiplexing. In TDM each packet leaves the source and is switched on the shared communication channel through a multiplexer. At the destination the packet is switched through a demultiplexer to the destination.
In the figure this process is illustrated with a multiplexing circuit shown.

© Copyright Virtual University of Pakistan

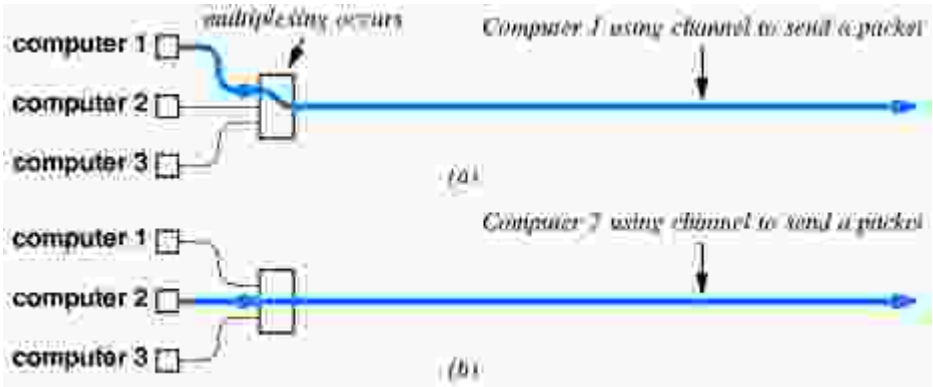

Figure 4.2 illustration of TDM

PACKETS AND FRAMES:

PACKETS:

Packet is a generic term that refers to small block of data. Packet have different format. Each hardware uses different packet format.

FRAME:

A frame or hardware frame denotes a packet of a specific format on a specific hardware technology.

FRAME FORMAT:

We need to define a standard format for data to indicate the beginning and end of the frame. Header and tail are used to frame the data as shown in the figure below.

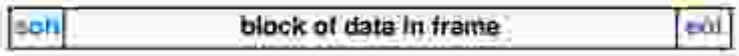

Figure 4.3 illustration of a Frame

We see that in the figure soh and eot are used to denote the start of header and end of tail.

FRAMING IN PRACTICE:

In practice there is a disadvantage of overhead. To avoid the no delay between two frames each frame sends an extra character between block of data.
The framing in practice also has some transmission problems just like:

- Missing eot indicates sending computer crashed.
- Missing soh indicates receiving computer missed beginning of message.
- Bad frame is discarded.

© Copyright Virtual University of Pakistan

Lecture No. 5

BYTE STUFFING

Sometimes the special character (i-e soh and eot) may appear in data and as a part of data they will be misinterpreted as framing data.
The solution to this problem is Byte stuffing.

Long Q

In general to distinguish between data being sent and control information such as frame delimiters network systems arrange for the sending side to change the data slightly before it is sent because systems usually insert data or bytes to change data for transmission, the technique is known as Data Stuffing.

There are two types of data stuffing:

- Byte Stuffing
- Bit Stuffing

Byte stuffing refers stuffing with character oriented hardware and bit stuffing refers to bit oriented hardware.

Byte stuffing translates each reserved byte into two unreserved bytes. For example: it can use esc as prefix followed by x for soh, y for eot and z for eco.

The receiver then replaces each occurrence of esc x, esc y and esc z by the corresponding single character. This is shown in figure below:

Character In Data	Characters Sent
soh	esc x
eot	esc y
eoc	esc z

Figure 5.1

Byte stuffing is illustrated in another figure below we can see the replacement of characters.

© Copyright Virtual University of Pakistan

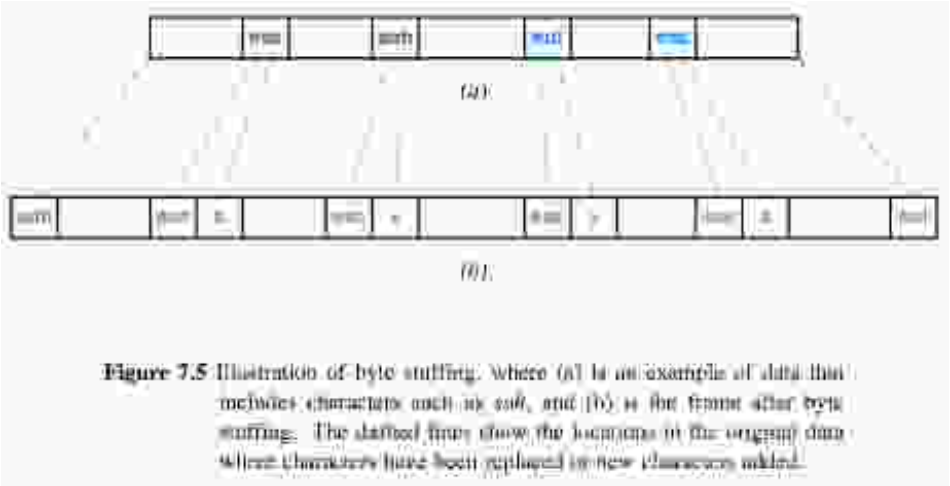

Figure 7.5 Illustration of byte stuffing. Where (a) is an example of data that includes characters such as esc, and (b) is the frame after byte stuffing. The dashed lines show the locations in the original data where characters have been replaced or new characters added.

TRANSMISSION ERRORS:

Transmission errors may occur due to different causes for example interference or power surges may destroy data during transmission. In result of which the bits are lost or the bit value may be changed.

ERROR DETECTION AND CORRECTION:

To detect and correct errors, frames include additional information, which is inserted by the sender and checked by the receiver. In this way incorrect data can be rejected. Also the incorrect data can be corrected and accepted.

PARITY CHECKING:

To detect the error there are different schemes in which parity checking is also commonly used. In parity checking, parity refers to the number of bits set to 1 in the data item.
There are two types:

- Even Parity
- Odd Parity

EVEN PARITY:

In an even parity the no. of 1's in data should be an even number.

ODD PARITY:

In an Odd parity the no. of bits should be an odd number.

PARITY BIT:

A parity bit is an extra bit transmitted with data item chose to give the resulting bit even or odd parity.

© Copyright Virtual University of Pakistan

For example an even parity data 10010001 has parity bit 1 as it has odd number of 1's. An odd parity data 10010111 has parity bit 0 as it has odd number of 1's.

Let us consider another example, if noise or other interference introduces an error one of the bits in the data will be changed from a 1 to a 0 or from a 0 to a 1. Thus the parity of resulting bits will be large.

Suppose original data and parity is 10010001+1 (even parity). After interference the incorrect data is 10110001+1 and it has become an odd parity.

Long Q

LIMITATIONS OF PARITY CHECKING:

Parity can only detect errors that change in odd number of bits for example the original data and parity is 10010001+1 (even parity) and the incorrect data is 10110011+1 (even parity). We see that even no. of bits have been changed due to noise so parity checking can not detect this error.
Parity usually is used to detect on bit error.

ALTERNATIVE ERROR DETECTION SCHEMES:

In addition to parity checking alternative error detection mechanisms have been introduced. These mechanisms differ from each other by the following respects.

- The size of the additional information (transmission overhead)
- Computational complexity of the algorithm (computational overhead)
- The number of bits errors that can be detected (how well errors are detected)

CHECKSUM

The second procedure used to detect errors is checksum. In this procedure data is treated as a sequence of integers and their arithmetic sum is computed and the carry bits are added to the final sum. Then checksum is calculated by transmission then it is sent along the data and the receiver and the same calculation is performed and then compared with the original checksum transmitted. In this way errors are detected if the received checksum is different from the sent.
The figure illustrates the example.

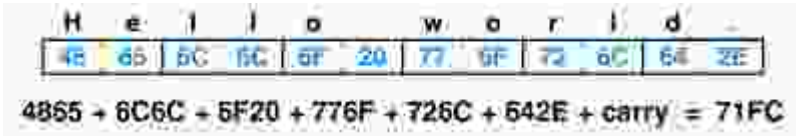

Figure 5.3

The integers can be 8, 16 or 32 bits. Checksum is easy to do. It uses only addition but it has also limitations and can not detect all errors. As shown below.

© Copyright Virtual University of Pakistan

Data Item In Binary	Checksum Value	Data Item In Binary	Checksum Value
0001	1	0011	3
0010	2	0000	0
0011	3	0001	1
0001	1	0011	3
totals	7		7

Figure 5.4

CYCLIC REDUNDANCY CHECK (CRC):

To enable a network system to detect move error without increasing the amount of information in each packet another most successful approach is made which is called CRC.

To understand the concepts of CRC consider data in a message as co-efficient of a polynomial. Their co-efficient set is divided by a known polynomial.

The remainder of this division is then transmitted as CRC and checked at the receiver to detect errors.

CRC has good error detection properties. It is easy to implement in hardware.

HARDWARE COMPONENTS USED IN CRC:

CRC uses just two hardware components:

- Shift register
- Exclusive OR (XOR unit)

The XOR unit is shown in the figure below.

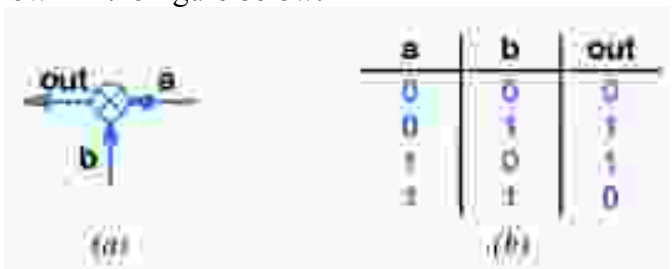

Figure 5.5

Shift register is also shown in figure. It performs two operations.

- Initialize: sets all bits to zero
- Shift: moves all bits to the left position.

© Copyright Virtual University of Pakistan

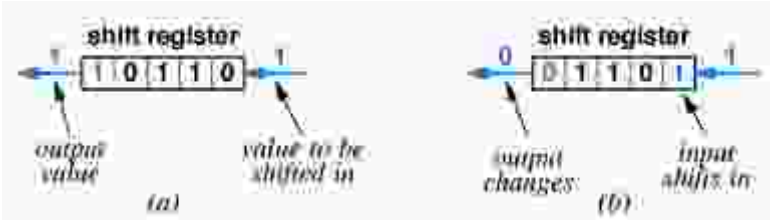

Figure 5.6

© Copyright Virtual University of Pakistan

Lecture No. 6

SHIFT OPERATION

This operation shifts all bits to the left one position. For example in the figure below a 16-bit CRC hardware is shown, which uses three shift registers and three Exclusive OR (XOR) units.

Figure 6.1

We see that this hardware can compute 16-bit CRC. Also in the figure, we see that the registers are initialized to zero and the bits of message are shifted through the input. When all 16 bits are shifted then the CRC is found in the registers.

In another figure, we see that input data is all 1s and CRC shown after 15, 16, 17 bits are shifted and feedback introduces 0s in CRC.

TYPES OF ERRORS:

CRC can check the following errors better than check sums.
a) Vertical errors b) Burst errors

a) VERTICAL ERRORS:

This type of error occurs due to a hardware failure. e.g. the second bit of every character will damage.

b) BURST ERRORS:

When a small set of bits changes near a specific location due to lighting or electric motor starting nearby etc. then these types of errors are called Burst errors.

FRAME FORMAT AND ERROR DETECTION:

The modified frame format also includes CRC. If there is an error occurred in frame, then it typically causes receiver to discard frame. The frame including CRC is shown in the figure.

Figure 6.2

© Copyright Virtual University of Pakistan

LAN TECHNOLOGY AND NETWORK TOPOLOGY

Most networks are local and are designed to share resources among multiple computers. Hardware technologies used for local networks allow multiple devices to connect with a shared network. In this shared medium the computers must take turns using the shared medium.

DIRECT POINT-TO-POINT COMMUNICATION:

Early networks used direct point-to-point communication. In such a mode of communication each communication channel connects exactly two computers. In this way it forms a mesh or point-to-point network, which is shown in the figure below.

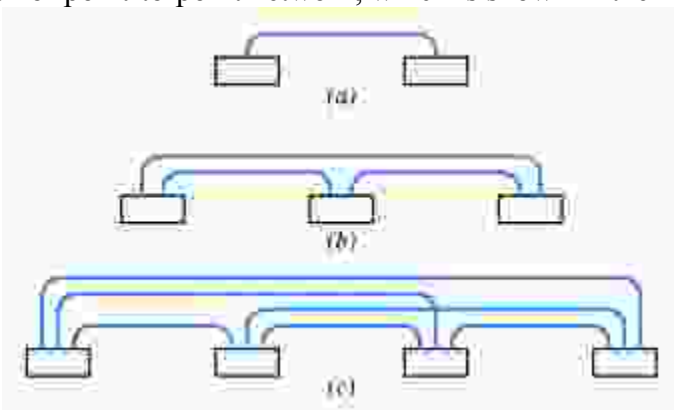

Figure 6.3

ADVANTAGES:

Direct point-to-point communication has the following advantages:

- The connection type of individual connections can be different.
- Individual connections can choose a different frame format and error detection mechanism etc.
- It is easy to enforce security and privacy.

DISADVANTAGES:

Direct point-to-point communication has the following disadvantages:

- The no. of connections grow more rapidly than the no. of computers
- For ‘n’ computers connections = (n^2 – n)/2.
- Most computers use the same physical path.
- Direct point-to-point communication is expensive due to a no. of connections.
- Another disadvantage is that adding a new computer to the network requires N-1 new connections as shown in the above figure.

© Copyright Virtual University of Pakistan

Lecture No. 7

GROWTH OF LAN TECHNOLOGY

The development of shared communication channels (LANs) started in 1960s and early 1970.
The key idea behind was to reduce the number of connections by sharing connection among many computers

Each LAN consists of a single shared medium. The computers take turns using the medium. First one computer uses the medium to send its data over the channel then second and son on. But sharing a single medium over long distances is efficient, due to the long delays.

LAN technologies reduce cost by reducing no. of connections. But attached computers compete for use of shared connections. The local communication consists of LAN exclusively. But the long distance communication is point-to-point exclusively.

SIGNIFICATION OF LANs AND LOCALITY OF REFERENCE:

LANs are most popular form of computer networks. One of its bright features is that this technology is inexpensive. The demand of LANs is related to a principle known as "Locality of Reference Principle".

"LOCALITY OF REFERENCE" PRINCIPLE:

Principle of "Locality of Reference" helps predict computer communication patterns. There are two patterns given as follows:

A) SPATIAL LOCALITY OF REFERENCE
B) TEMPORAL LOCALITY OF REFERENCE

a) SPATIAL LOCALITY OF REFERENCE:

In this pattern computers are likely to communicate with other computers that are located nearby.

b) TEMPORAL LOCALITY OF REFERENCE:

In this pattern computers are likely to communicate with the same computers repeatedly.
Thus LANs are effective because of spatial locality of reference. Temporal locality of reference may give insight into which computers should be on a LAN.

© Copyright Virtual University of Pakistan

LAN TOPOLOGIES:

Network can be classified by shape. According to which there are three most popular topologies, which are given as follows;

- Star
- Ring
- Bus

STAR TOPOLOGY:

In this topology, all computers are attached to a central point, which is sometimes called the "Hub" as shown in the figure below.

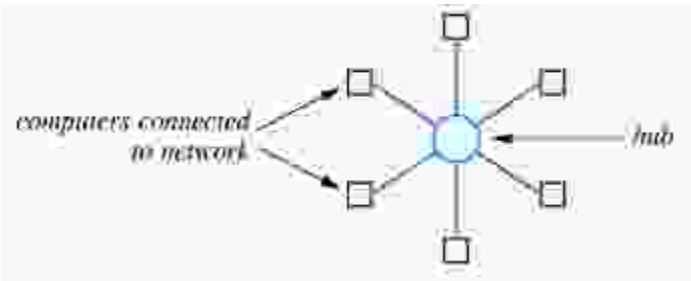

FIGURE 7.1 AN IDEALIZED STAR NETWORK

It is important to note that these networks are not physically like stars but they are logically like stars. It means that their shape does not look like a star but their connections are just like a star. The above diagram is idealized. Here is shown a star network in practice in the figure below:

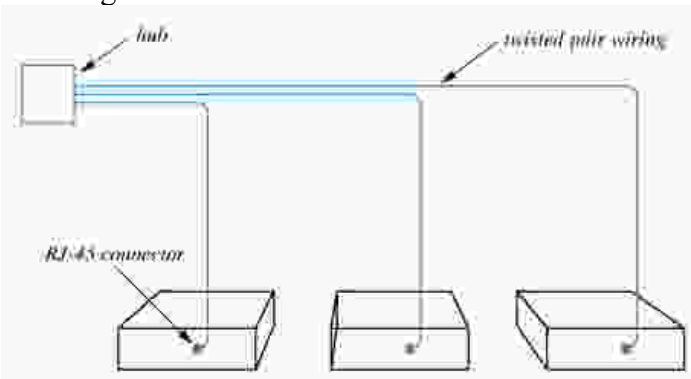

FIGURE 7.2 STAR NETWORK IN PRACTICE

RING TOPOLOGY:

In this topology of network the computers are connected to each other in closed loop. In this network first computer passes data to the second and then second passes data to third and so on, as shown in the figure.

© Copyright Virtual University of Pakistan

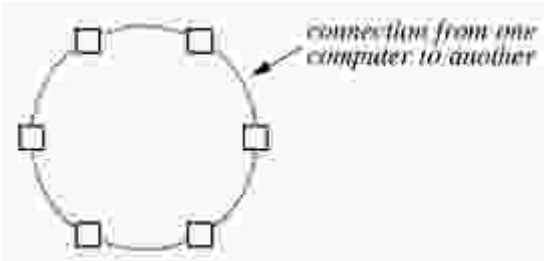

FIGURE 7.3

Like star topology the ring network are also logically ring and not physically.

BUS TOPOLOGY:

In a bus topology all computers are attached to a single long cable and any computer can send data to any other computer.

For this purpose, coordination is required to decide which computer has to use the line at what time. The bus topology is shown below:

FIGURE 7.4 BUS TOPOLOGY

REASON FOR MULTIPLE TOPOLOGIES:

Each topology has advantages and disadvantages, which are discussed below:

IN A RING:

It is easy to coordinate access to other computers however entire network is disabled if a cable cut occurs.

IN A STAR:

On the other hand only once computer is affected when a cable cut occurs.

IN A BUS:

The network needs fewer wires than a star, however entire network is disabled when a cable cut occurs.

© Copyright Virtual University of Pakistan

EXAMPLE BUS NETWORK; ETHERNET:

Ethernet is a widely used LAN technology. It was invented at EXROX PARC (Palo Alto Research Center) in 1970s.
Xerox, Intel and Digital defined it in a standard so it is also called DIX standard. The standard is now managed by IEEE in which 802.3 standard of IEEE defines formats, voltages of cable length etc.

The Ethernet uses bus topology. It uses a single coaxial cable. To which multiple computers connect.

One Ethernet cable is sometimes called a segment. This segment is limited to 500 meters in length. The minimum separation between connections is 3 meters.

ETHERNET SPEEDS:

The Ethernet speed was originally 3Mbps, and the current standard is 10Mbps the fast Ethernet operates at 100Mbps. There are also gigabits Ethernet available now.

ENCODING USED IN ETHERNET:

The encoding used in Ethernet is Manchester encoding. It uses signal changes to encode data.
e.g. A change from positive voltage to 0 encodes as shown in the figure below:

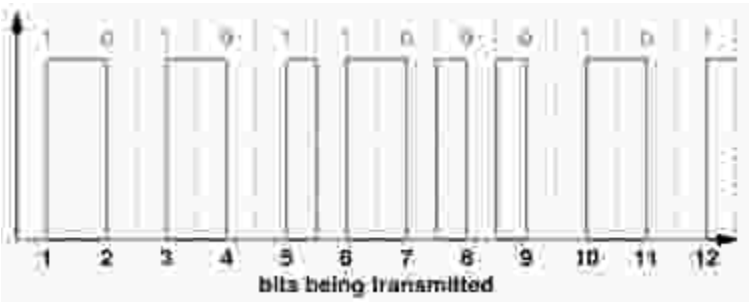

FIGURE 7.5

© Copyright Virtual University of Pakistan

Lecture No. 8

CARRIER SENSE MULTIPLE ACCESS (CSMA)

There is no central control management when computers transmit on Ethernet. For this purpose the Ethernet employs CSMA to coordinate transmission among multiple attached computers.

CSMA is a coordination scheme that defines how to take turns using a shared cable.

A computer listen to the codes i.e. it senses the carrier. If the cable is idle it starts transmitting and if the cable is in use then it waits.

If simultaneous transmission occurs, the frames interfere with each other and this phenomenon is called collision.

COLLISION DETECTION:

As explained above, the signals from two computers will interfere with each other and the overlapping of frames is called a collision.
It does not harm to the hardware but data from both frames is grabbled.

ETHERNET CD:

To detect the collision, Ethernet interfaces include hardware to detect transmission. It performs two operations:

- It monitors outgoing signals.
- Grabbled signal is interpreted as a collision.

After collision is detected computers stop transmitting. So Ethernet uses CSMA/CD to coordinate transmission.

RECOVERY FROM COLLISION:

Computer that detects a collision sends special signal to force all other interfaces to detect collision.

Computer then waits for other to be idle before transmission. But if both computers wait for same length of time, frames will collide again. So the standard specifies maximum delay and both computers choose random delay, which is lesser. After waiting, computers use carrier sense to avoid subsequence collision.
The computer with shorter delay will go first and other computer may transmit later.

© Copyright Virtual University of Pakistan

EXPONENTIAL BACK OFF:

Even with random delays, collision may occur especially likely with busy segments. Computers double delay with each subsequent collision. It reduces likely hood of sequence of collision.

802.11 WIRELESS LANs AND CSMA/CA:

IEEE 802.11 is standard wireless LAN that uses radio signals at 2.4GHz. Its data rate is 11Mbps. The older devices use radio signals at 900MHz and data rate of 2Mbps. Bluetooth specifies a wireless LAN for short distances. It uses shared medium and radio waves instead of coaxial cable.

Long Q

LIMITED CONNECTIVITY WITH WIRELESS:

In contrast with wired LANs, not all participants may be able to reach each other. Because:

- It has low signal strength.
- In wireless LANs the propagation is blocked by walls etc.
- It can't depend on CD to avoid interference because not all participants may hear.

This is shown in the figure below:

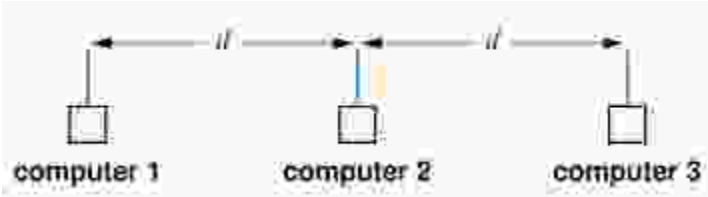

FIGURE 8.1

CSMA/CA:

Wireless uses collision avoid ness rather than collision detection. Transmitting computer sends very short message to receiver. Receiver responds with short message reserving slot for transmitter. The response from receiver is broadcast, so all potential transmitters receive reservation.

COLLISION:

The receiver may receive simultaneous requests, which results in collision at receivers and both requests lost and in this way no transmitter receives reservations and both use back off and retry. The receiver may receive closely spaced requests. It selects

© Copyright Virtual University of Pakistan

one of them and then the selected transmitter sends message and the transmitter not selected uses back off and retries.

LOCAL TALK:

Apple invented the LAN technology that uses bus topology. Its interface is included with all Macintosh computers.
It has relatively low speed i.e. 230.4Kbps. Also it is of low cost and we can get a free with a Macintosh, which is easy to install and connect. It uses CSMA/CA.

TOKEN RING:

Many LAN technologies that are ring topology use token passing for synchronized access to the ring. The ring itself is treated as a single shared communication medium. Both pass from transmitter passed by other computers and are copied by destination.

Hardware must be designed to pass token ever if attached computer powered down. This is shown in figure below.

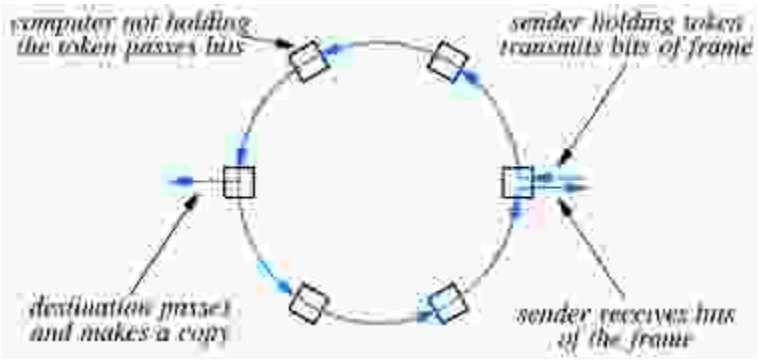

FIGURE 8.2

USING THE TOKEN:

When a computer waits to transmit it waits a token. After transmission computer transmits token on ring. Next computer is then ready to transmit, receive and then transmits.

TOKEN AND SYNCHRONIZATION:

Because there is only one token, only one computer will transmit at a time.
Token is a short reserved frame that can not appear in data.

Hardware must regenerate token if lost. Token gives computer permission to send one frame. If all computers are ready to transmit it enforces Round-Robin access. But if now computer is ready to transmit, token circulates around ring.

© Copyright Virtual University of Pakistan

IBM TOKEN RING:

It is very widely used. It was originally 4Mbps and now it is upto 16Mbps. It uses special connection cable between the computer and the Ring interface.

FDDI: Fiber distributed data interconnect (FDDI) is another ring technology. Its most important features are:
It uses fiber optics between stations and transmits data at 100Mbps.
It uses pair of fibers to form two concentric rings.

FDDI AND RELIABILITY:

FDDI uses counter rotating rings in which data flows in opposite directions.

In case of fiber a station failure, remaining stations loop back and reroute data through spare ring. In this way all stations automatically configure loop back by monitoring data ring. It is shown in figure below

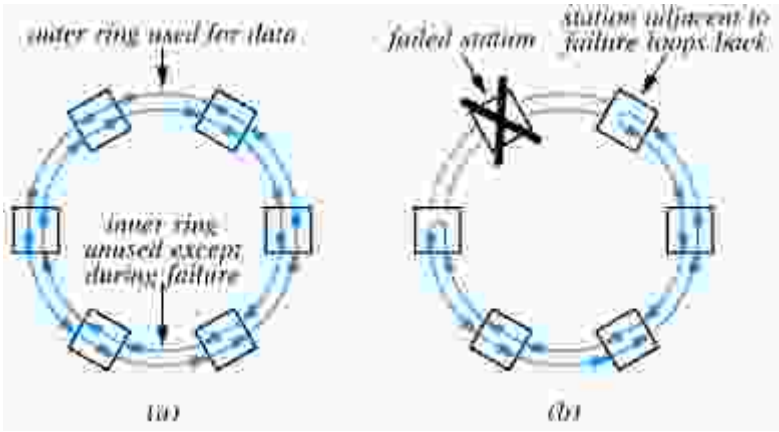

FIGURE 8.3 FDDI AND RELIABILITY:

ATM ----STAR NETWORK:

The ATM (Asynchronous Transferred Mode) technology consists of electronic packet switches to which the computers can connect.
ATM switches form a hub into which computers can connect in a star topology.
Computer gets point-to-point connections. Data from transmitters is routed directly through hub switches to destination. An ATM star network is shown in the figure below:

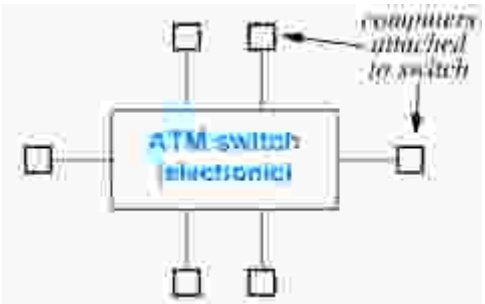

FIGURE 8.4 ATM SWITCH

© Copyright Virtual University of Pakistan

ATM DETAILS:

- It transmits data at over 100Mbps.
- It uses fiber optics to connect computer to switch.
- Each connection includes two fibers.
- It is also shown in figure.

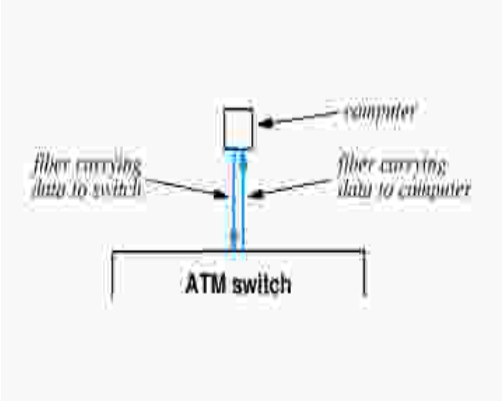

FIGURE 8.5

© Copyright Virtual University of Pakistan

Lecture No. 9

HARDWARE ADDRESSING

We need to devise technique for delivering message through LAN medium to single, specific destination computer. Sending computer uses a hardware address to identify the intended destination of a frame. The sending computer also identifies type of data carried in the frame.

SPECIFYING A DESTINATION:

The data sent across a shared network reaches all attached stations - for all LAN topologies. Interface hardware detects delivery of frame and extracts frame from medium. But most applications want data to be delivered to one specific application on another computer but not all computers.

HARDWARE ADDRESSING:

Most network technologies have a hardware-addressing scheme that identifies stations on the network. Each station is assigned a numeric hardware address or physical address. . Sender also includes hardware address in each transmitted frame. In this way only station identified in frame receives copy of frame. Most LAN technologies include sender's hardware address in frame too.

LAN HARDWARE AND PACKET FILTERING:

The figure below illustrates the LAN hardware:

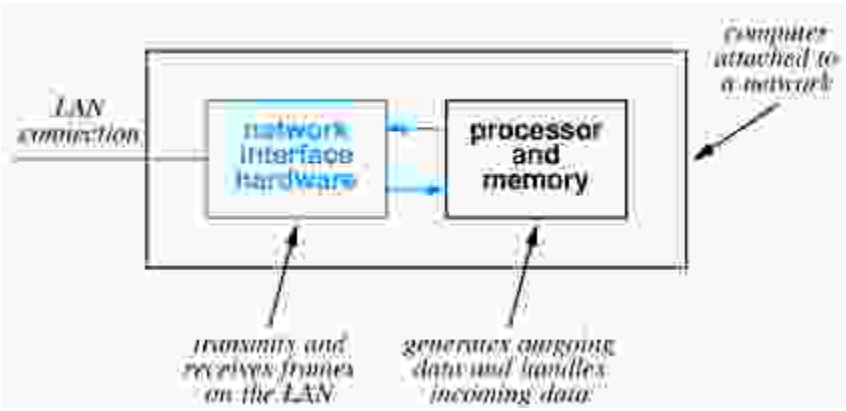

Figure 9.1

LAN INTERFACE:

LAN interface handles all details of frame transmission and reception which are given as follows:

© Copyright Virtual University of Pakistan

- It adds hardware addresses, error detection codes, etc. to outgoing frames.
- It may use DMA to copy frame data directly from main memory.
- It obeys access rules (e.g., CSMA/CD) when transmitting.
- It checks error detection codes on incoming frames.
- It may use DMA to copy data directly into main memory.
- It checks destination address on incoming frames.
- The frames not addressed to the local computer are ignored and don't affect the local computer in any way.

FORMAT OF HARDWARE ADDRESS:

It consists of a numeric value and its size is selected for specific network technology. The length of the format is one to six bytes.

ASSINGING HARDWARE ADDRESS:

The hardware address must be unique on a LAN. How can those addresses be assigned and who is responsible for uniqueness? The answer to these questions depends on the particular LAN technology being used. There are three categories of address forms:

- Static
- Configurable
- Dynamic

STATIC:

In this category the hardware manufacturer assigns permanent physical address to each network interface and manufacturer must ensure that every interface has a unique address.

CONFIGURABLE:

In this category, the address can be set by the end user either manually e.g. switches or jumpers on the interface or electronically (e.g. through software).
The system administrators must coordinate to avoid the conflict.

DYNAMIC:

In this category the interface automatically assigns physical address each time it is powered up. This automatic scheme must be reliable to prevent conflicts.

BROADCASTING:

Some applications want to broadcast messages to all stations on the LAN. For this purpose shared communication channel can make broadcast efficient in such a way that message is delivered to all stations. A special broadcast address is used to identify broadcast message, which are captured by all stations.

© Copyright Virtual University of Pakistan

Lecture No. 10

FRAME TYPE IDENTIFICATION

There are some problems with the broadcast. For every broadcast frame on the network each computer uses computational resources and places the contents into memory, which interrupt the CPU. It allows system software to make the decision whether to discard or use the frames.

Another problem is that if a pair of computer use broadcasting instead of sending them directly all other computers waste CPU time while discarding the frames.

MULTICASTING:

The solution to above problem is multicasting. It is the restricted form of broadcasting. It works like broadcasting however it does not forward frames automatically to the CPU.

The interface hardware is programmed in advance to accept certain frames that have multicast address as the destination address.

If an application program wishes to receive certain frames then it program the interface hardware to accept an additional set of addresses.

The interface hardware frame then begins accepting three types of frames:

- Multicast frames
- Broadcast frames
- The frames that are distend to the station itself.

MULTICAST ADDRESSING:

We take an example of computers running an audio application. We see that they can receive audio frames if the interface are programmed to received them and the other computers that are not running that audio application will not waste resources

.

IDENTIFYING PACKET CONTENTS:

The destination must get some clue about how to interpret frame data. For this purpose it can use two types which are given as follows.

EXPLICIT FRAME TYPE:

In this type the identifying value is included with frame describes types of included data.

Long Q

© Copyright Virtual University of Pakistan

IMPLICIT FRAME TYPE:

In implicit frame the receiver must infer from frame data.

HEADERS AND FRAME FORMAT:

LAN technology standards define frame format for each technology. All contemporary standards use the following general format.
a) Frame header b) payload

Frame header has address and other identifying information.
Information typically in fields has fixed size and location. The data area may vary in size.

The Ethernet frame format is shown in the figure.

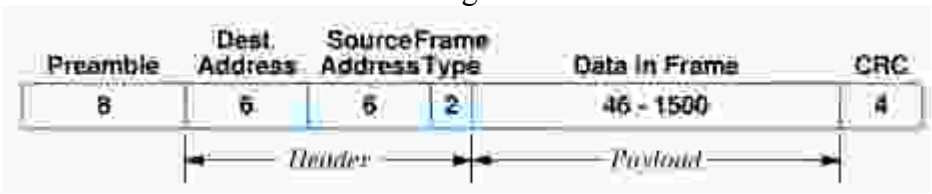

Figure 10.1 the Ethernet frame format

The different friends of ether frame format and their purposes is explained below:

FIELD	PURPOSE
Preamble	Receiver synchronization
Destination Address	Identifies intended receiver
Source Address	Hardware address of sender
Frame Type	Type of data carried in frame
Data	Frame payload
CRC	32-bit CRC code

ETHERNET FIELDS:

In Ethernet fields the preamble and CRC is often not shown in frame. The destination address of all is the broadcast address. There is special value reserved for frame type field.

FRAME WITHOUT TYPE FIELDS:

Some LAN technologies do not include a type field.
Sender and receiver can agree on interpretation, which is as follows:
They agree on single data format and use only that format this limits to one type of data. In this way all computers on LAN must use one format. Also they agree to encode the data format into first few bytes of the data field.

© Copyright Virtual University of Pakistan

ENCODING THE DATA TYPE:

The figure illustrates a frame in which the data type is specified by using the data area.

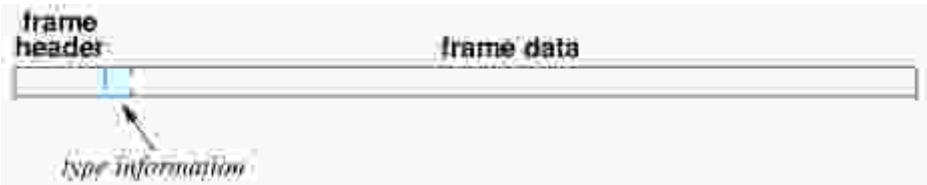

Figure 10.2. Encoding the data type

To ensure interoperability format of encoding area must be universally agreed upon it typically set by standards only.

IEEE 802.2 LLC:

IEEE 802.2 standard includes logical link control (LLC) sub network attachment point (SNAP) header. SNAP/LLC format is widely used for example by Ethernet.
This is shown in figure below:

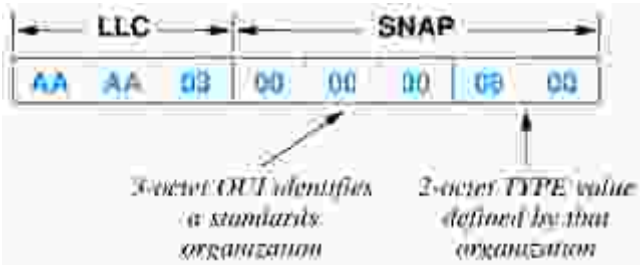

Figure 10.3. SNAP/LLC format

In the figure LLC portion indicates SNAP field to follow OUI (organizationally unique identifier) identifies Ethernet specification organization.

Also the type field is interpreted as in Ethernet (in this case, IP) as shown in figure above.

UNKNOWN TYPES:

For either encoding format some computer may not be prepared to accept frames of some types, which are unknown e.g. protocol type is not installed and the newly defined type.
The receiving computer examines the field and discards any frame with unknown type.

NETWORK ANALYZERS:

A network analyzer also called network monitor or a network sniffer is used to examine the performance of or debug a network.

It can report statistics such as capacity utilization, distribution of frame size, collision rate or token circulation time.

© Copyright Virtual University of Pakistan

OPERATION OF NETWORK ANALYZERS:

The basic idea behind the operation of network analyzer is a computer with a network interface that receives all frames, which is called promiscuous mode.
Many desktop computers have interface that can be configured for promiscuous mode.
When combined with software computer can examine any frame on LAN. In this way the communication across LAN is guaranteed to be private. This computer receives and displays (but does not respond to) frames on the LAN.

Network analyzer can be configured to filter and process frames. It can count frames of specific type of size.
It displays only frames from or to specific computers. In general it can be configured to match any value of any field and capture only these frames meeting the filter specifications.
`

© Copyright Virtual University of Pakistan

Lecture No. 11

INTERFACE HARDWARE

LAN data transmission speeds are typically fast relative to CPU speeds. LANs speeds are defined independent of any specific processor speeds, which allows for mix of any attached systems. In this way new computers can be attached without affecting LAN speeds.

NETWORK INTERFACE HARDWARE:

CPU can't process data at network speeds. So in order to connect to the network computer systems use special purpose hardware for network connections which consists of typically a separate card in the back plane which is called Network Adapter Card or Network Interface Card (NIC).

The connector on NIC at the back of computer then accepts cable to physical network. The CPU structure is shown in the figure.

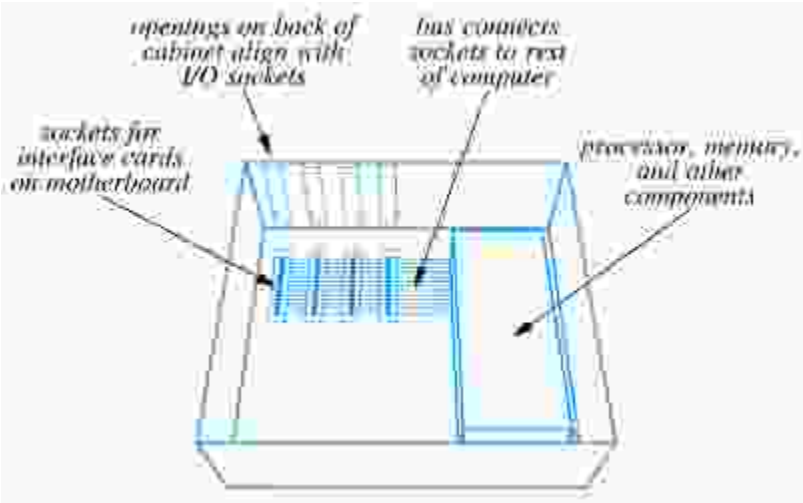

Figure 11.1

The Network Connector is also shown in the figure below.

© Copyright Virtual University of Pakistan

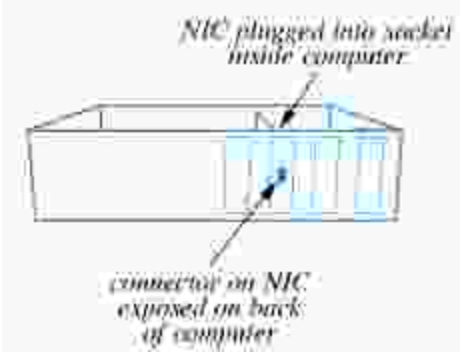

Figure 11.2

NICs AND NETWORK HARDWARE:

NIC is built for one kind of physical network. For example Ethernet interface can not be used with token ring and similarly ATM interface cannot be used with FDDI.

Some NICs can be used with different but similar hardware for example thick, thin and 10 Base-T Ethernet, 10Mbps and 100Mbps Ethernet.

Long Q

NIC AND CPU PRCESSING:

NIC contains sufficient hardware to process data independent of system CPU. In which some NICs contain separate microprocessor. In addition to this it also include analog circuitry interface to system bus, buffering and processing.

NIC looks like any other I/O device to system CPU. The system CPU forms message request and sends instructions to NIC to transmit data. NIC also receives interrupt on incoming data.

CONNECTION BETWEEN NIC AND PHYSICAL NETWORK:

TWO ALTERNATIVES:

NIC contains all circuitry and connects directly to network medium. A cable from NIC connects to additional circuitry that then attaches to the network medium.

THIN ETHERNET VERSUS 10BASE-T:

Thin Ethernet and 10Base-T are both Ethernet. The network technology is not limited to one style of connection.

© Copyright Virtual University of Pakistan

THICK ETHERNET WIRING:

It uses thick coax cable. AUI cable (or transceiver or drop cable) connects from NIC to transceiver. AUI cable carries digital signal from NIC to transceiver. The transceiver generates analog signal on coax cable. The wires in AUI carry digital signals power and other control signals. Thick Ethernet also requires terminators to avoid signal reflectance. This is shown in the figure below:

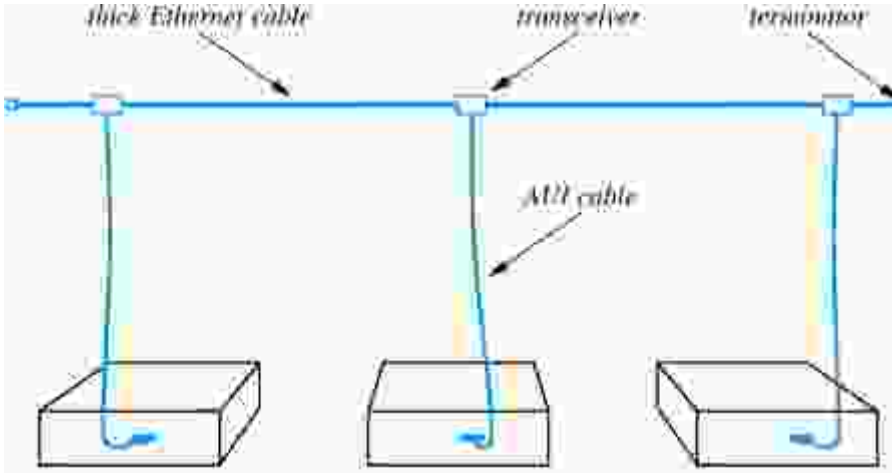

Figure 11.3

CONNECTION MULTIPLEXING:

In some circumstances transceiver may be in convenient e.g. workstations in a LAN. Connection multiplexer connects multiple computers to a single transceiver. Each computer's AUI cable connects to connection multiplexer. One AUI from multiplexer to Ethernet coax. Connection multiplexing is shown in the figure below.

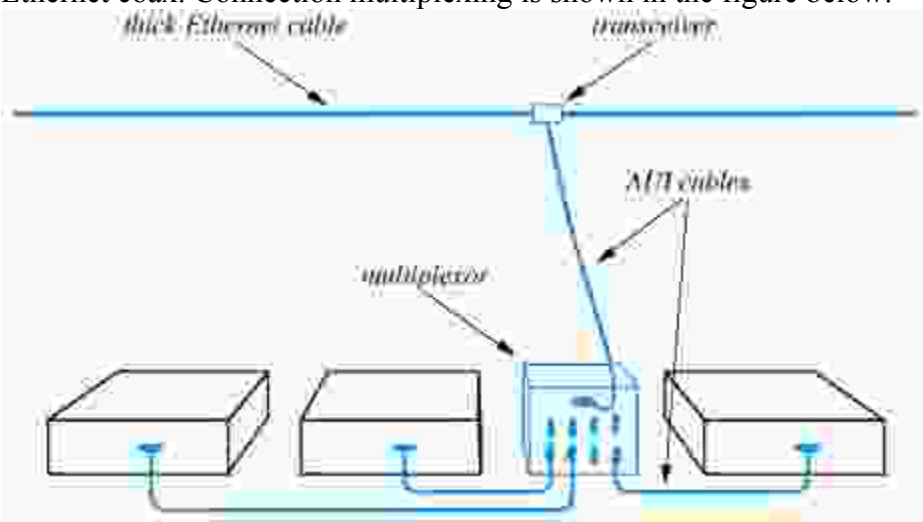

Figure 11.4

© Copyright Virtual University of Pakistan

THIN ETHERNET WIRING:

Thin Ethernet uses thin coax cable that is cheaper and easier to install than thick Ethernet coax. In this case transceiver electronics are built into NIC and NIC connects directly to network medium.

Coax cable use BNC connector on NIC. Coax runs directly to back of each connected computer by T-connector. The T-connector directly attaches to NIC. This is shown in the figure below.

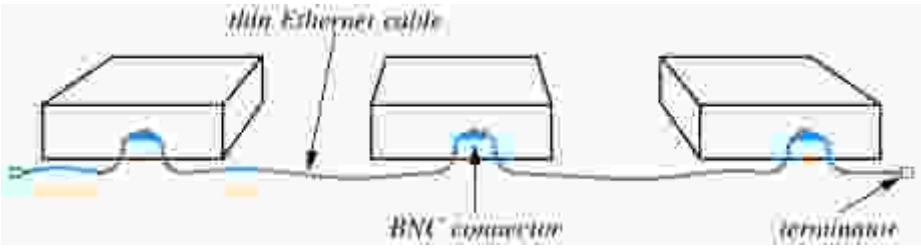

Figure 11.5

Thin Ethernet is useful when many computers are located close to each other. It may be unreliable because any disconnection disrupts entire net.

© Copyright Virtual University of Pakistan

Lecture No. 12

LAN WIRING AND PHYSICAL TOPOLOGY

10BASE-T:

This is another standard of wiring scheme. It is commonly called 10Base-T, Twisted Pair or TP Ethernet. It replaces AUI cable with twisted pair cable and thick coax with hub.

This makes it cheaper and that 's why it is most useful technology of today. It is shown in the figure below:

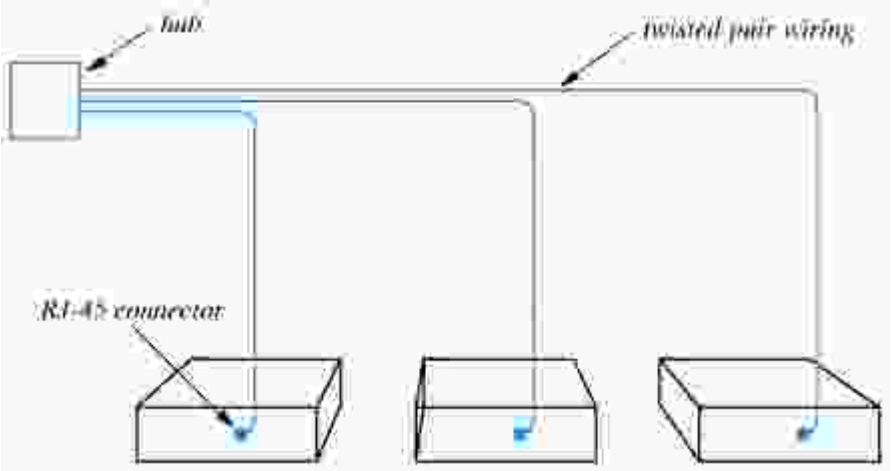

Figure12.1

HUBS:

They are used for extension of connection with multiplexing concept. They are sometimes called Ethernet-in-a-box. It is effectively a very short Ethernet with very long AUI cables. It can be connected into larger Ethernet.

PROTOCOL SOFTWARE AND ETHERNET WIRING:

All wiring technologies use identical Ethernet specifications. e.g. they use same frame format. They use same CSMA/CD algorithms. They can mix different technologies in an Ethernet.

NICs can provide all three-connection technologies. The protocol software can't differentiate among wiring technologies. The NIC is shown in the figure below with three connectors.

© Copyright Virtual University of Pakistan

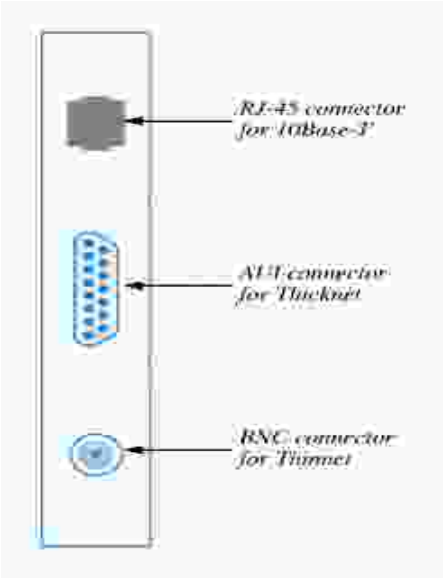

Figure 12.2

COMPARISON OF WIRING SCHEME:

The wiring schemes are compared as follows:

Separate transceiver allows computers to be powered off or disconnected from network without disrupting other communication.

Transceiver may be located in an inconvenient place, so finely malfunction transceiver can be hard.

In other case, thin coax cable takes minimum of cable. Disconnecting one computer (on one loose connection) can disrupt entire network.

Hub wiring centralizes electronics and connections. It makes management easier.

Bottom line 10Base-T is most popular because of lowest cost.

TOPOLOGIES AND NETWORK TECHNOLOGIES:

10Base-T network topology is a bus but wiring topology is a star. The token ring network topology is a ring but wiring topology is a star.

We should remember to distinguish between logical and physical topologies. A topology is logically a star or it is physically a star.

FILTERING INCOMING FRAMES:

An analyzer can be configured to filter and process frames. It can count frames of a specific type or size. It can also display only frames from or to specific computers.

© Copyright Virtual University of Pakistan

In general, it can be configured to match value of any field and capture only those frames making the filter specification.

ADVANTAGE AND DISADVANTAGE OF WIRING SCHEMES:

Each of three wiring schemes has advantages and disadvantages, which are explained as follows:

RELIABILITY ISSUES:

Wiring that uses a transceiver for each connection does not affect the entire network if a transceiver cable is disconnected. A cable cut occurring in hub wiring only affects one computer.

COST ISSUES:

Twisted pair Ethernet is the cheapest wiring that makes it so popular. Thicknet is the most costly wiring, which is no longer used.

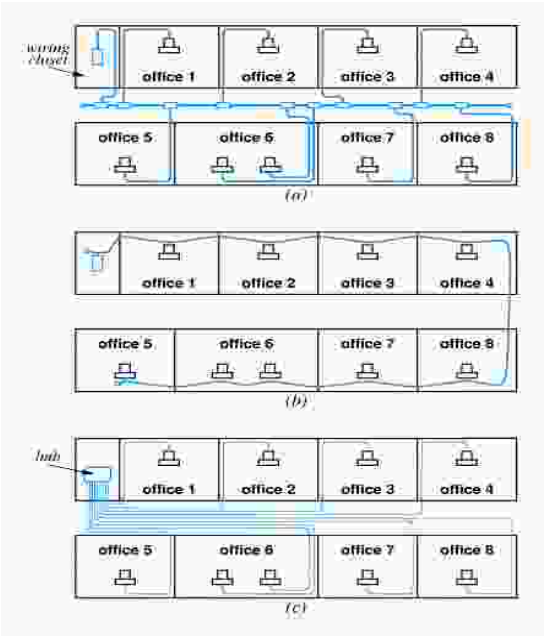

Figure 12.3

As shown in the figure eight offices are wired with

a) Thick Ethernet b) Thin Ethernet c) Twisted pair Ethernet

We can see that the length of wired varies in three schemes so cost varies in three schemes.

© Copyright Virtual University of Pakistan

THE TOPOLOGY PARADOX:

The main feature of twisted pair Ethernet is that it forms a classic star topology however functions like a bus. 10Base-T Ethernet is often called a star shaped bus.

Two different types OF TOPOLOGIES:

LOGICAL TOPOLOGY:

It is defined by the specific network technology.

PHYSICL TOPOLOGY:

It depends on the wiring scheme.

NETWORK INTERFACE CARD AND WIRING SCHEMES:

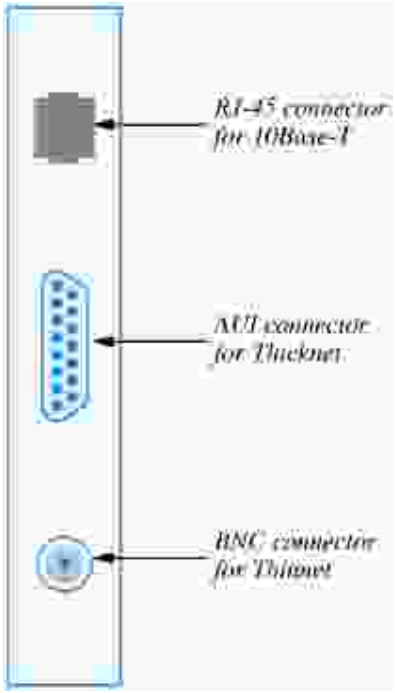

Figure 12.4

To allow changing the wiring without changing the interface hardware, NICs support multiple wiring schemes. it is shown in the figure below.

10/100 NETWORK INTERFACES AND AUTONEGATIATION:

10Base-T version of twisted pair Ethernet operated at 10Mbps. 10Base-T Twisted pair Ethernet operates at 100Mbps.

© Copyright Virtual University of Pakistan

Long Q

100Base-T technology is backward compatible and allows the participants to negotiate a speed when connection is established. This process is known as auto negotiation.

CATEGORIES OF WIRES:

Cable used for wiring should match the following:

- The intended data rate
- The distance between devices
- The amount of em-noise
- Anticipated future needs
- Cost

Some categories and their typical uses are shown in the figure below.

Category	Bandwidth	Typical Uses
3	16 MHz	older, low-speed networks; analog telephones
4	20 MHz	short distance 10Base-T
5	100 MHz	10Base-T Ethernet, some 100Base-T
5E	100 MHz	100Base-T (Fast Ethernet); some 1000Base-T
6	250 MHz	1000Base-T Gigabit Ethernet or ATM
7	600 MHz	future (possibly 10 Gigabit Ethernet)

Figure 12.5

WIRING SCHEMES AND OTHER NETWORK TECHNOLOGIES:

Multiple wiring schemes are not limited to Ethernet technology. Almost all-together network technologies use different wiring schemes. e.g., local talk uses hubs (physical star) to simulate a bus topology.

IBM's token ring also uses hubs (physically a star topology) to simulate a logical ring network.

© Copyright Virtual University of Pakistan

Lecture No. 13

FIBER MODEMS AND REPEATOERS

LAN technologies are designed to operate within the same building. However most companies or institutions have offices located far apart from each other.

DISTANCE LIMITATION AND LAN DESIGN:

The maximum cable length of a LAN is fixed because the electrical signal level gets weaker as it travels. The delays must be short to allow access mechanisms (CSMA/CD, token passing) work properly.

However in most cases a LAN needs to be extended layer distances than the maximum Cable length limit.

For example: extending a company LAN to another building.

LAN EXTENSIONS:

Several techniques extend diameter of LAN medium. In this purpose most techniques use additional hardware. LAN signals relayed between LAN segments.

Resulting mixed technology stays within original engineering constraints while spanning greater distance.

FIBER OPTIC EXTENSION:

The LAN extension using fiber optic is shown in the figure below:

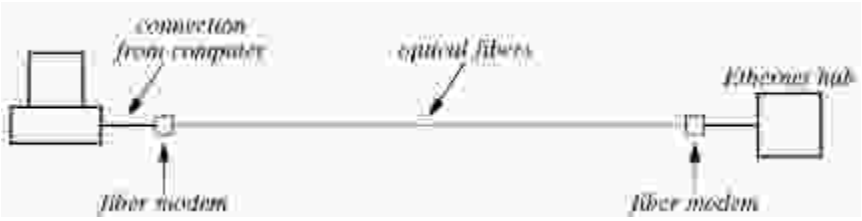

Figure 13.1

The fiber-modem coverts digital data into pulses of light then transmits over the optical fiber. It also receives light and converts into digital data.

This mechanism will successfully extend the optical fiber across several kilometers because delays on optical fiber are very low and bandwidth is very high.

© Copyright Virtual University of Pakistan

REPEATERS:

Repeaters are used when copper wire communication is carries out. According to the fact that electrical signal gets weaker while traveling over copper wires. A repeater is used to increase the signal strength. It amplifies the weakening signal received from one segment and then retransmits onto another segment.
It is shown in the figure below:

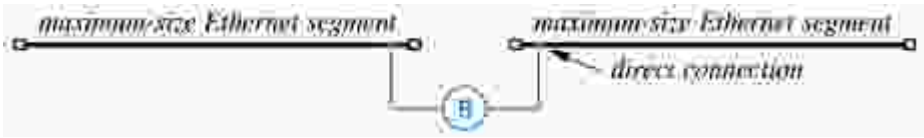

Figure13.2

Long Q

One repeater doubles, two repeaters triple the maximum cable length limitation.

Computers attached to different segments communicate as if they are connected to the same cable.

It is to be noted that we cannot increase the maximum cable length as many times as we wish by just adding repeaters. The reason for this is that every repeater introduces a delay and the access mechanism such as CSMA/CD does not work with long delays.

Ethernet standard specifies that any two stations cannot be separated by more than four repeaters.

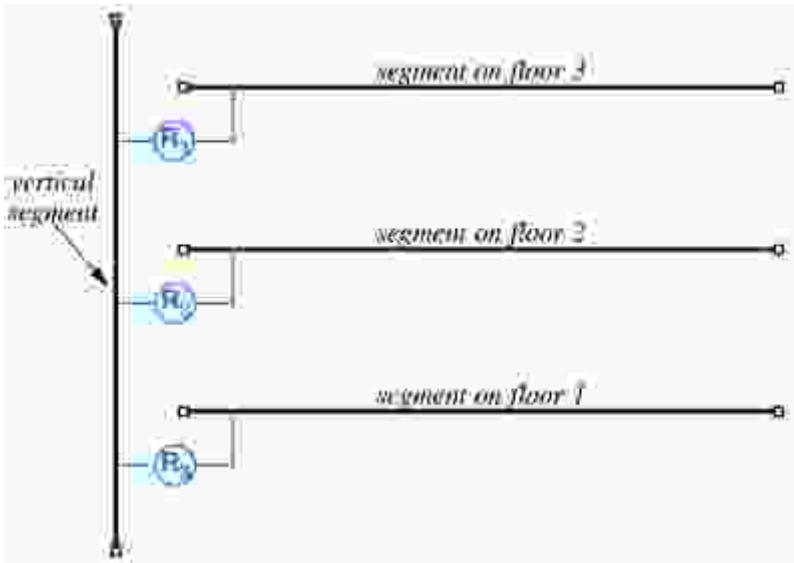

Figure13.3

The figure shows repeaters using the vertical segment. We see that only two repeaters separate any two stations in this scheme.

© Copyright Virtual University of Pakistan

DISADVANTAGES OF REPEATERS:

Repeaters do not recognize frame formats, they just amplify and retransmit the electrical signal. If a collision or error occurs in one segment, repeaters amplify and retransmit also the error onto the other segments.

BRIDGES:

A bridge is a hardware device also used to connect two LAN segments to extend a LAN. Unlike a repeater, a bridge uses two NICs to connect two segments. It listens to all traffic and recognizes frame format. It also forwards only correct complete frames and discards the collided and error frames.

A typical bridge has two NICs, a CPU a memory and a ROM. It only runs the code stored in its ROM.

FRAME FILTERING:

The most important task a bridge performs is frame filtering. If both the source and destination are on the same segment, it does not forward the frame to the other segment. A frame is forwarded to the other segment, if it id destined to that segment. Broadcast and multicast frames are also forwarded.

A bridge keeps a list for each segment that consists of physical addresses of the computer attached to that segment. In this way a bridge knows on which segment a destination computer is attached.

Most bridges are self learning bridges. As soon as a frame arrives to a bridge, it extracts a source address from its header and automatically adds it in the list for that segment. In this way a bridge builds up address lists. This is shown in the figure below:

Event	Segment 1 List	Segment 2 List
Bridge boots	—	—
U sends to V	U	—
V sends to U	U, V	—
Z broadcasts	U, V	Z
Y sends to V	U, V	Z, Y
Y sends to X	U, V	Z, Y
X sends to W	U, V	Z, Y, X
W sends to Z	U, V, W	Z, Y, X

Figure 13.4

© Copyright Virtual University of Pakistan

Lecture No. 14

BRIDGES

STARTUP AND STEADY STATE:

When a bridge first boots the address lists are empty (start up state). The bridge forwards frames to the other segment if it can not find its destination address in its lists.

After some time when the bridge has received at least one frame from every computer, it has the lists built (steady state) it forwards frames as far it is necessary.

PLANNING A BRIDGE NETWORK:

In a steady state, a bridge allows simultaneous use of each segment. When designing a LAN, bridges can be installed to divide the LAN into segments to improve performance.

For example:

Frequently contacting computers can be attached to the same segment. The frame traffic on one segment does not affect the other segments.

BRDGING BETWEEN BUILDINGS:

If two buildings are located far from each other, a bridge, a pair of fiber modems and an optical fiber can be used to connect two LANs as shown in the figure below.

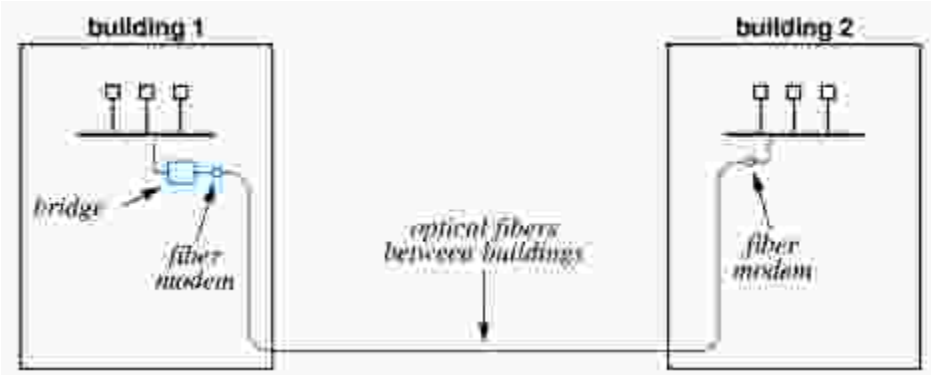

Figure14.1

© Copyright Virtual University of Pakistan

BRIDGING BETWEEN BUILDINGS:

ADVANTAGES:

COST:

An optical fiber modem pair is sufficient to connect many computers located on separate buildings.

MAINTAINANCE:

There is no need to change the wiring between the buildings when installing and removing a computer.

PERFORMANCE:

The traffic on each building does not affect the other.

BUIDING ACROSS LONGER DISTANCES:

It is not always possible to connect two sites with optical fiber because the distance may be too long. It is usually not allowed to lay an optical fiber if the land does not belong to you.

There are two common methods to connect two distant sites.

LEASED SERIAL LINE CONNECTION: Which is less distant.

LEASED SATELLITE CHANNEL:

It can span arbitrarily long distance. It is shown in the figure below.

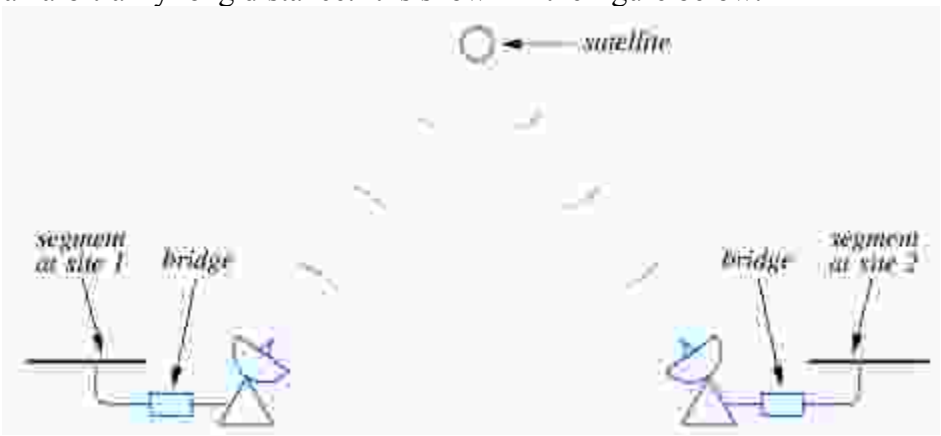

Figure14.2

© Copyright Virtual University of Pakistan

Unlike optical fibers, satellite connections are low bandwidth to save cost. Because the frames arrived from local network are much faster than they can be sent across a satellite link.

The bridge must use buffering (saving a copy of frame into memory until it can be sent). It may run out of memory. The communication software usually waits for a response after sending a few frames.

A CYCLE OF BRIDGES:

A bridges network can connect many segments. One bridge is needed to connect each segment to the rest of the bridge network. This is shown in the figure below:

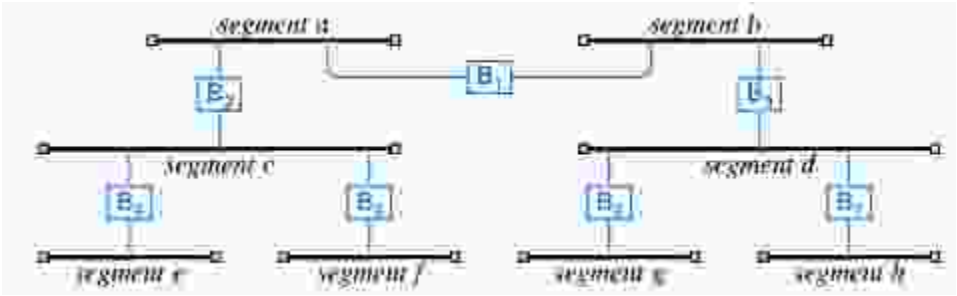

Figure14.3

If the bridges on the longer network form a cycle, then broadcasting frames introduce a problem i.e. the copies of broadcast frame continuously flows around the cycle (each computer receiving an infinite number of copies). This is shown below.

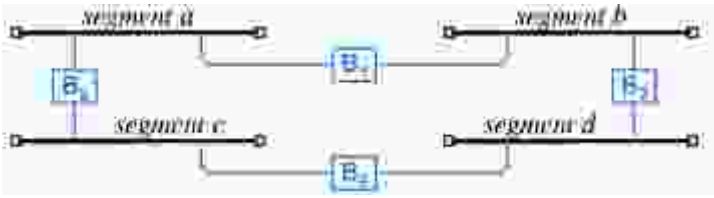

Figure14.4

DISTRIBUTED SPANNING TREE:

If a bridge network forms a cycle, then not all bridges on the network must be allowed to forward broadcast frames.

The bridges configure themselves automatically to decide which bridge will forward broadcast frames and which bridge will not.

The bridges communicate with each other on the network and use Distributed Spanning Tree (DST) algorithm to decide which bridge will not forward frames if a cycle occurs.

© Copyright Virtual University of Pakistan

Lecture No. 15

SWITCHES AND WAN TECHNOLOGIES

SWITCHING:

A switched LAN consists of a single electronic device that transfers frames among the connected computers. A hub with multiple ports simulates a single shared medium. However a switch simulates a bridged LAN with one computer per segment.
A switch is shown in the figure below.

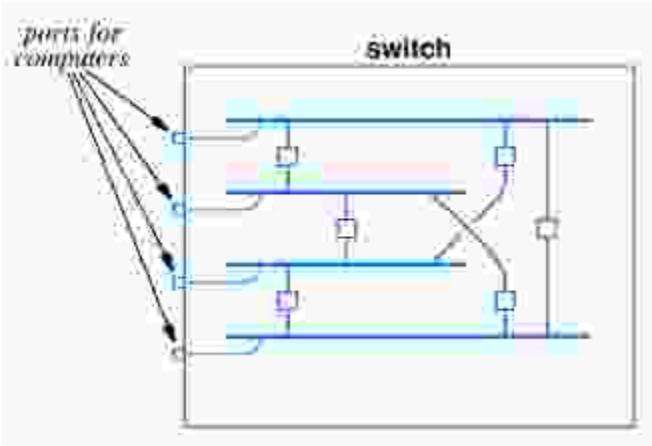

Figure 15.1

If a hub is used to connect among computers on a LAN, then only two computers can communicate at a given time. However if a switch is used, the communication between two computers will not affect the other pair of computers. They can communicate at the same time.

COMBINING SWITCHES AND HUBS:

To reduce costs, computers can be connected and distributed to a number of hubs, and then the hubs can be connected to a switch. Hubs simulate single shared LAN segments and a switch simulates a bridged LAN connecting segments.

BRIDGING AND SWITCHING WITH OTHER TECHNOLOGIES:

Hubs, Bridges and Switches are not limited to Ethernet logical bus topology. They are available also for other networking technologies such as token ring, FDDI etc. like FDDI hub and Token ring hub.

© Copyright Virtual University of Pakistan

WAN TECHNOLOGIES AND ROUTING;

INTRODUCTION:

LANs can be extended using techniques in previous chapter. They can not be extended arbitrarily for or to handle many computers. Because there are distance limitations even with extensions so we need other technologies for larger networks.

CHARACTERIZATION OF NETWORKS:

There are three types of characterization of networks.

LOCAL AREA NETWORK (LAN):
It is used for a single building.

METROPOLOTAN AREA NETWORK (MAN):
It is used for a single city.

WIDE AREA NETWORK (WAN):
It is used for a country level networking and even for continents.

DIFFERENCE BETWEEN LAN AND WAN:

Although LAN is for a local area but satellite bridge can extend LAN across large distances. But it still can't accommodate arbitrarily many computers.

On the other hand WAN must be scalable to long distances and many computers.

PACKET SWITCHES:

To span long distances or many computers, networks must replace shared medium with packet switches. Each switch moves an entire packet from one connection to another. That's why they are called packet switches. A packet switch consists of a small computer with network interfaces, a memory and a program dedicated to packet switching function.

A packet switch is shown in the figure below.

Figure 15.2

© Copyright Virtual University of Pakistan

CONNECTION TO PACKET SWITCHES:

A packet switch many connect to computers and to other packet switches. But the speeds are different in both cases. There are typically high-speed connections to other packet switches but lower speed connections to the computers. The technology details depend upon desired speed.

PACKET SWITCHES AS A BUILDING BLOCKS:

Packet switches can be linked together to form WAN. WAN need not be symmetric or have regular connections. Each switch may connect to one or more other switches and one or more other computers as shown in the figure below.

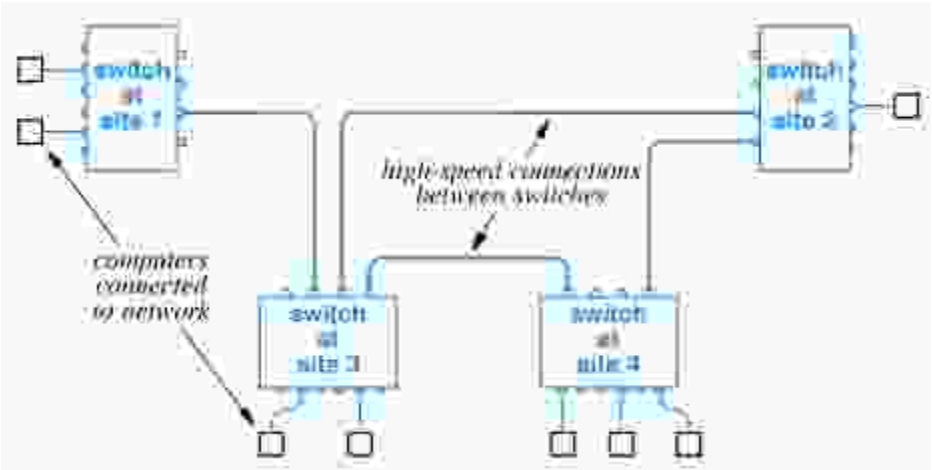

Figure 15.2

STORE AND FORWARD:

Data delivery from one computer to another is accomplished through store and forward technology. In this technology packet switch stores incoming packet and also forwards that packet to another switch or computer. For this purpose packet switch has internal memory into which it can hold packet if outgoing connection is busy. Packets for each connection held on queue.

PHYSICAL ADDRESSING IN A WAN:

The physical addressing in a WAN is similar as in LAN in the following way:

- The data is transmitted in packets equivalent to frames.
- Each packet has a format with header.
- The packet header includes destination and source addresses.
- Many WANs use hierarchical addressing for efficiency. One part of address identifies destination switch. Other part of address identifies port on switch. This is shown in the figure below.

© Copyright Virtual University of Pakistan

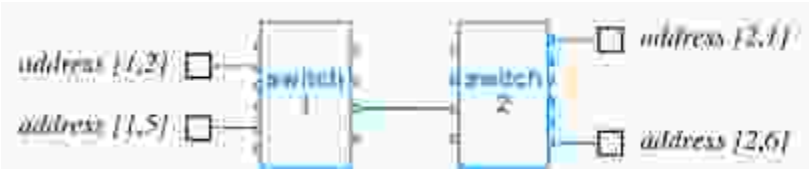

Figure 15.4

NEXT HOP FORWARDING:

Packet switch must choose outgoing connection for forwarding the packet. There are two cases.

- If the destination is local computer, packet switch delivers computer port.
- If the destination is attached another switch, this packet switch forwards to next hop through connection to another switch.
- The choice of another switch is based on destination address in packet.

© Copyright Virtual University of Pakistan

Lecture No. 16

ROUTING

SOURCE INDEPENDENCE:

Next hop to destination does not depend on source of packet. This phenomenon is called 'Source Independence'. It has several benefits. It allows fast and efficient routing. Packet switch need not hove complete information about all destinations in spite it just has next hop so reduces total information and increases dynamic robustness. The network can continue to function even if topology changes without notifying entire network.

HIERARCHICAL ADDRESSING AND ROUTING:

The process of forwarding the packets of information is called routing. The information about destinations is kept in routing tables. Note that many entries have same next hop. It is shown in the figure.

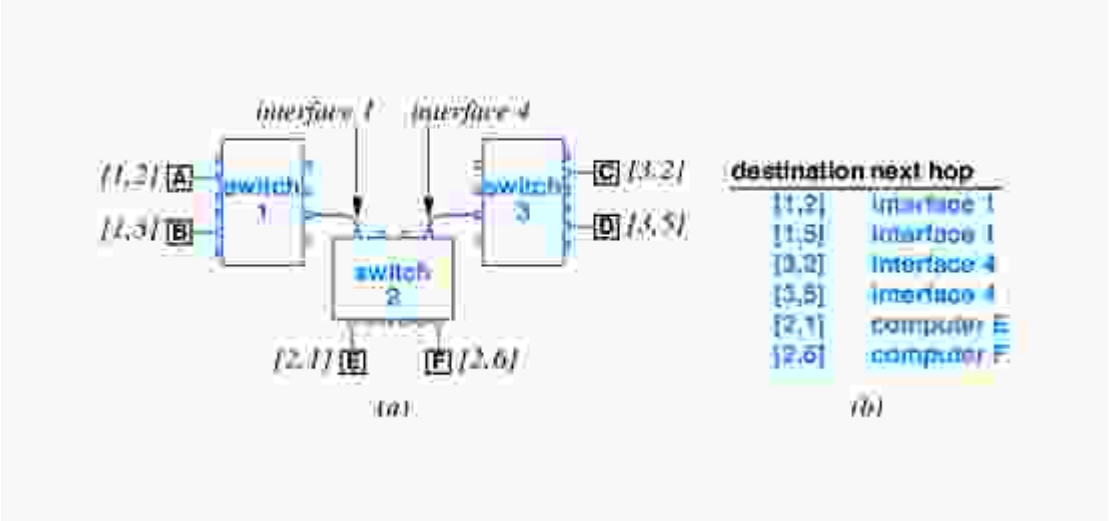

Figure 16.1

In particular all destinations on same switch have same next hop. These routing tables can be collapsed. A specific routing table is shown in the figure.

© Copyright Virtual University of Pakistan

Figure 16.2

ROUTING IN A WAN:

As there will be more computers there will be more traffic of information. We can add capacity to WAN by adding more links and packet switches. Packet switches need not have computers attached. There are two types of switch according to the attached computers.

INTERIOR SWICH:

The switch that has no attached computers is called an interior switch.

EXTERIOR SWITCH:

The switch that has computers attached with it is called exterior switch.
Both interior and exterior switches forward packets and they also need routing tables. The routing table must have two things.

UNIVERSAL ROUTING:

It should have next hop for each possible destination.

OPTIMAL ROUTES:

The next hop in table must be on shortest path to destination.

MODELING A WAN:

To model a WAN, we use a graph in which the nodes model switches and the edges model direct connection between switches. The modeling captures essence of network and it ignores attached computers as shown in the figure below. Modeling of a specific WAN is shown.

© Copyright Virtual University of Pakistan

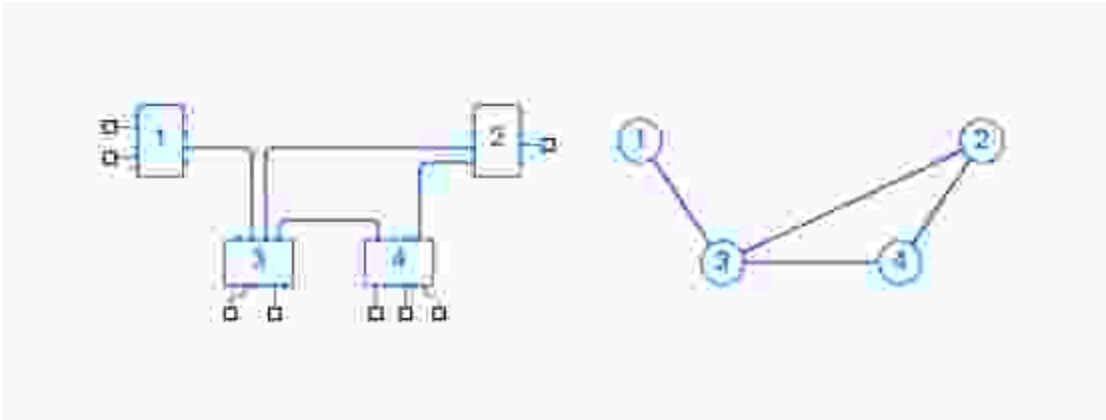

Figure 16.3

ROUTE COMPUTATION WITH A GRAPH:

We can represent routing table with edges as shown in the figure below:

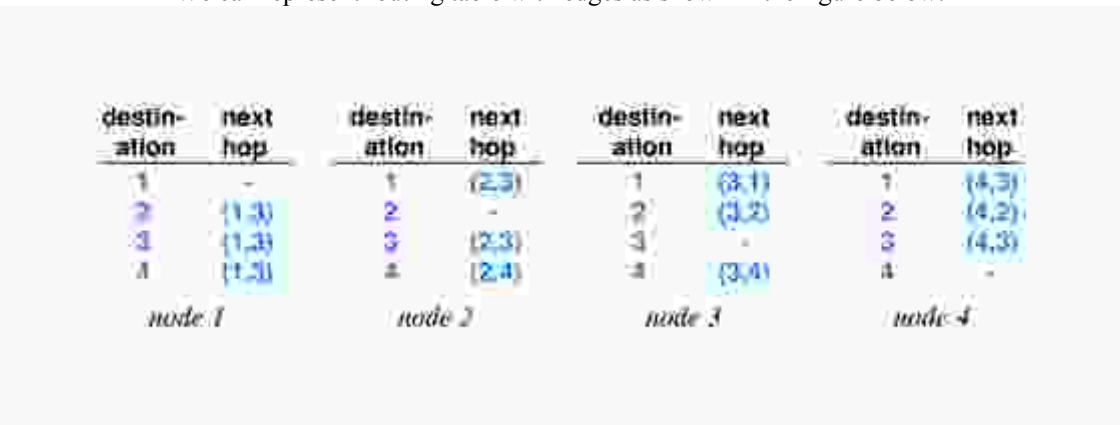

destin-ation	next hop
1	-
2	(1,3)
3	(1,3)
4	(1,3)

node 1

destin-ation	next hop
1	(2,3)
2	-
3	(2,3)
4	(2,4)

node 2

destin-ation	next hop
1	(3,1)
2	(3,2)
3	-
4	(3,4)

node 3

destin-ation	next hop
1	(4,3)
2	(4,2)
3	(4,3)
4	-

node 4

Figure 16.4

The graph algorithms can be applied to find routes.

REDUNDANT ROUTING INFORMATION:

Notice duplication of information in routing table for node 1 as shown above in the figure. We see that switch has only outgoing connection, all traffic must traverse that connection.

DEFAULT ROUTES:

Routing table entries can be collapsed with a default route. If the destination does not have in explicit routing table entry, then it use a default route. Default routes for 4 nodes are shown in the figure below.

© Copyright Virtual University of Pakistan

destin-ation	next hop
1	-
3	(1,3)

node 1

destin-ation	next hop
2	-
4	(2,4)
3	(2,3)

node 2

destin-ation	next hop
1	(3,1)
2	(3,2)
3	-
4	(3,4)

node 3

destin-ation	next hop
2	(4,2)
4	-
3	(4,3)

node 4

Figure 16.5

© Copyright Virtual University of Pakistan

Lecture No. 17

ROUTING ALGORITHMS

BUILDING ROUTING TABLES:

There are basically two methods for building routing tables, which are as follows:

- Manual entry
- Software

Further there are two methods for computing routing table information.

- Static routing
- Dynamic routing

STATIC ROUTING:

It is done at boot time. It is simple and has low network overhead. It is inflexible.

DYNAMIC ROUTING:

It allows automatic updates by a programmer. It can work around network failures automatically.

COMPUTING SHORTEST PATH IN A GRAPH:

While computing shortest path, first we assume graph representation of network at each node then we use Djikstra's algorithm to compute shortest path from each node to every other node. Then extract next hop information from resulting path information and insert next hop information into routing tables.

WEIGHTED GRAPH:

Djikstra's algorithm can accommodate weights on edges in graph. The shortest path is then the path with lowest total weight (sum of the weight with all edges). It should be noted that the shortest path is not necessarily with fewest edges (or hops). For example as shown in the figure below:

© Copyright Virtual University of Pakistan

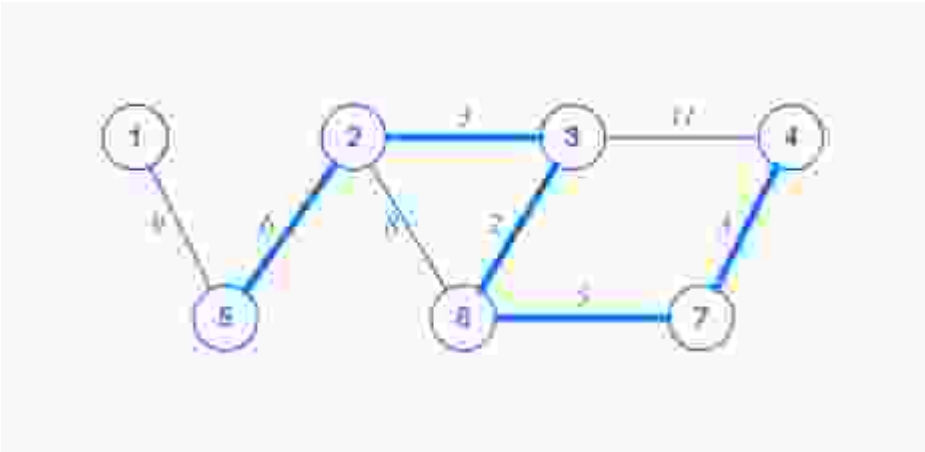

Figure 17.1

The shortest path in the figure from node 2 to node 6 is 2 to 3 and 3 to 6 as this path has the smallest weight so it is the shortest path.

DISTANCE MATRICS:

Weights on graph edges reflect cost of traversing edge. This cost may be in time, dollars or hop counting (weight == 1). The resulting shortest path may not have fewest hops.

DISTRIBUTED ROUTE COMPUTATION:

Each packet switch computes its routing table locally and sends messages to the neighbors. It also updates information periodically. If a link or a packet switch fails then the network adapts its failure. The packet switch then modifies the tables to avoid failed hardware.

Long Q

DISTANCE-VECTOR ROUTING:

Local information is next hop routing table and distance from each switch. The switches periodically broadcast topology information i.e. destination, distance.

Other switches update routing table based on received information.

VECTOR-DISTANCE ALGORITHM:

It is explained in more detail below:

Packet switches wait for next update message and they iterate through entries in message. If entry has shortest path to destination, insert source as next hop to destination and record distance as distance from next hop to destination plus distance from this switch to next hop.

© Copyright Virtual University of Pakistan

LINK-STATE ROUTING:

In link-state routing network topology is separated from route computation. Switches send link-state information about local connections. Each switch builds own routing tables. It uses link-state information to update global topology and runs Djikstra's algorithm.

COMPARISON:

DISTANCE-VECTOR ROUTING:

- It is very simple to implement.
- Packet switch updates its own routing table first.
- It is used in RIP.

Long Q

Difference

LINK-STATE ALGORITHM:

- It is much more complex.
- Switches perform independent computations.
- It is used in OSPF.

EXAMPLE WAN TECHNOLOGIES:

Some multiple WAN technologies are discussed below.

ARPANET:

It began in 1960's. It was funded by Advanced Research Project Agency, which is an organization of US defense department. It was incubator for many of current ideas, algorithms and Internet technologies.

X.25:

It was early standard for connection-oriented networking. It began from IFU, which was originally CCITT. It predates computer connections, which are used for terminal/time sharing connection.

FRAME RELAY:

It is used for Telco service for delivering blocks of data. It is connection based service and must contract with Telco for circuit between two endpoints. It is typically 56kbps or 1.5Mbps and can run to 100Mbps.

© Copyright Virtual University of Pakistan

SMDS:

Switched Multi megabit Data Service (SMDS) is also a Telco service. It is a connection less service. Any SMDS station can send information to any station on the same SMDS cloud. It is typically ranges from 1.5Mbps to 1000Mbps.

ATM (ASYNCHRONOUS TRANSFER MODE):

It was designed as a single technology for voice, video and data and has low jitter (variance in delivery time) and high capacity.

It uses fixed size, small cells, 48 octet's data and 5 octets header. It can also connect multiple ATM switches into a network.

© Copyright Virtual University of Pakistan

Lecture No. 18

CONNECTION-ORIENTED NETWORKING AND ATM

Long Q

LANs and WANs can both connect multiple computers, but they have different base technologies and meet different goals. ATM is a single technology that is designed to meet the goals of both LANs and WANs.
ATM uses the concept of connection-oriented networking.

ASYNCHRONOUS TRANSFER MODE (ATM):

Telephone companies (Telco's) introduced ATM to meet several goals. It provides universal service for all subscribers and support for all users for voice, video and data. It has a single unified infrastructure (no separate LANs and WANs). It gives guaranteed service when it is appropriate and support for low cost devices.

Long Q JITTER:

Jitter is the term used for variance in transmission delays.
Jitter is significance for voice, video and data. In LANs, jitter can occur when a packet is delayed because the network is busy.

PACKET SIZES:

Large packets result in fewer overheads because a smaller fraction of the packet is used for header information.
Optimum networks use 4kB packets or larger.

Large packets can't easily be used for voice for example 8-bit samples (at 125usec per sample) would require half a second to fill a 4kB packet. Echo cancellation can only be used with low transmission delays.

ATM CELLS:

To meet its goals, ATM uses small, fixed sized packets called cells. Each cell has 53 octets. VPI/VCI fields identify the cells destination.

PRIO tell if cell can be discarded CRC checks the header bits only. ATM header is about the 10% of the cell. Ethernet can have overhead of only 1%. Engineers sometimes call the ATM overhead the cell tax. An ATM is shown below.

© Copyright Virtual University of Pakistan

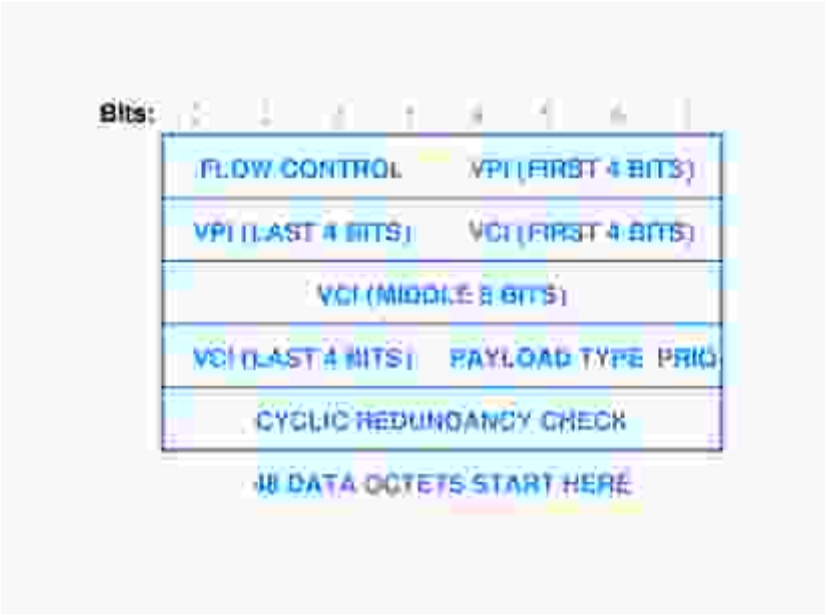

Figure.18.1

CONNECTION-ORIENTED SERVICE:

The connection-oriented service paradigm for networking is similar to the manner in which telephones are used. This is given as follows:

A caller dials a number of the destination. The telephone at the destination signals the arrival of a connection request. If the called person does not answer; the caller gives up after waiting for a timeout. If the called person does answer, then the connection is established.

In data communication, as binary connection identifier is given to each of the two parties to enable identification of the connection.

VIRTUAL CHANNEL (OR CIRCUITS):

Connections in ATM are called virtual channels (VC) or virtual circuits (a term preferred by some). These are called virtual, since connections are formed in ATM by starting values in memory locations (tables) in ATM switches as opposed to making actual electrical connections.

The VC is identified by a 24-bit value formed from the VPI or Virtual Path Indicator (8-bit), which identifies a particular path through the network and the VCI or Virtual Channel Indicator (16-bits), which identifies the channel in the virtual path being used by the connection.

Most frequently, the 24-bit pair is treated as just a single connection identifier by computers.

© Copyright Virtual University of Pakistan

Lecture No. 19

ATM: VIRTUAL CIRCUITS

LABELS AND LABEL SWITCHING:

An ATM network is built from interconnected ATM switches. The attachment points or ports can be connected to computers or other ATM switches. As cells arrive at an ATM switch, their VPI/VCI is modified using a forwarding table that gives the new VPI/VCI for the next leg of the cell's trip.

The forwarding table is essentially indexed by the incoming cell's VPI/VCI and the contents yield the new VPI/VCI.

LABEL REWRITING:

The replacement of the incoming cell's VPI/VCI with a probably different VPI/VCI is called rewriting.

ATM is thus called a label rewriting or label switching system. Thus two computers with a connection through an ATM network will likely have different VPI/VCI values for each end of the connection as shown in the figure below.

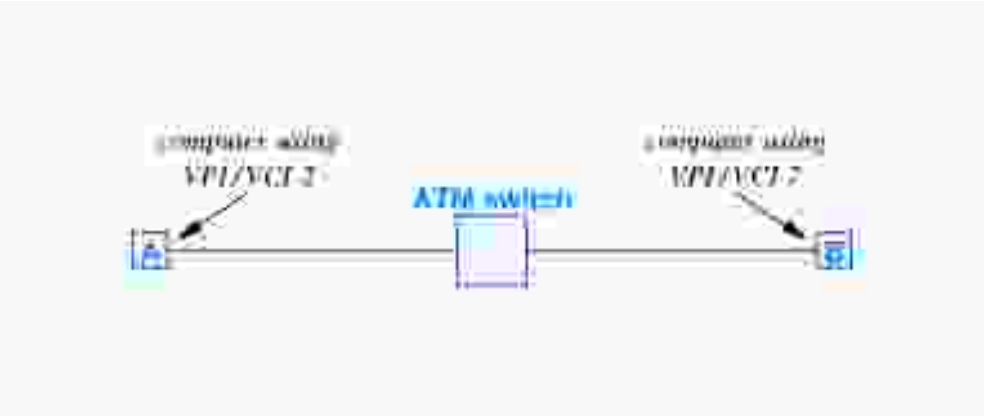

Figure 19.1

© Copyright Virtual University of Pakistan

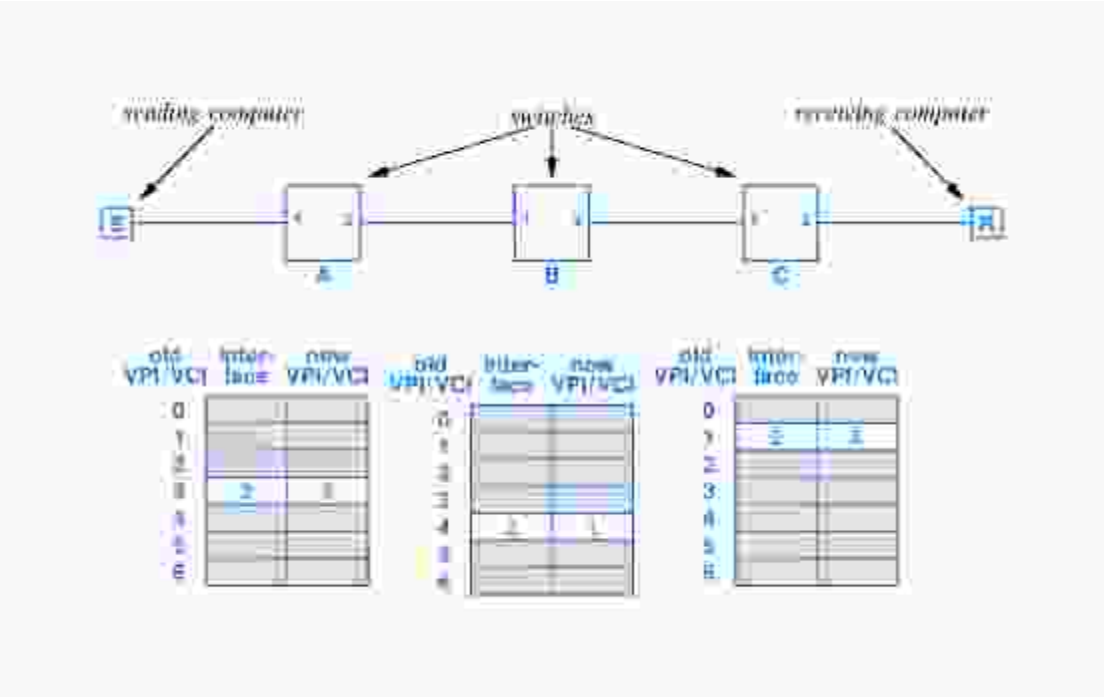

Figure 19.2

EXAMPLE:

As an example, in the figure we see that the sending computer S uses a VPI/VCI of 3 and sends a cell.

Switch A receives the cell and looks up 3, then rewrites the VPI/VCI as 4, and sends the cell out of its port 2.

Switch B receives the cell and looks up 4 then rewrites the VPI/VCI as 1 and sends the cell at its port 2.

Switch C receives the cell and looks up 1 then rewrites the VPI/VCI as 6 and sends the cell out of its port 2.

The receiving computer R receives the cell with a VPI/VCI of 6, which is the value it is using for the connection. Forwarding tables in each switch must be coordinated to define meaningful 'paths' through the network.

PERMANENT VIRTUAL CIRCUITS:

ATM can provide customers with virtual circuits that look like traditional leased digital circuits. Such permanent virtual circuits (PVC) last as long as the customer pay the periodic fee for its use. The forwarding tables are automatically restored after power of equipment failure. The forwarding table entries for such permanent VC's are statically configured, the terms used by Telco's for this is provisioning.

Provisioning requires two steps:

1. To determine a complete path (that is, identify the switches that will be used).
2. To choose appropriate VPI/VCI for each step in the path, and configure each adjacent pair of switches (easy, since each switch rewrites the VCI/VPI).

© Copyright Virtual University of Pakistan

SWITCHED VIRTUAL CIRCUITS:

Most networks offer dynamic connections, which last for a relatively short time. To handle this, ATM can dynamically establish a switched virtual circuit (SVC), allow it last as long as necessary and then terminate it.

The terminology comes from the Telco's where switching system normally refers to all switching.

ESTABLISHING AN SVC:

Long Q

The computer sends a connection request to the switch to which it is attached. Software in the switch finds a network path to the destination and sends along the connection request.

Each pair of switches in the path communicates to choose a VPI/VCI for their tables. Once the connection is established by the destination, a message is sent back to the originating computer to indicate the SVC is ready.

If any switch or the destination computer does not agree to setting up the VC, an error message is sent back and the SVC is not established.

SIGNALING:

The term signaling is used to describe communication about the network, as opposed to communication that just uses the network.

A computer uses signaling with reserved VCI/VPI values to communicate with a switch to establish a connection or send other network control messages. These connection requests and network control messages are also sent in cells and since the VPI/VCI use in these cells are reserved there is no confusion between data and control cells.

QUALITY OF SERVICE:

Networks are more frequently being designed to allow specification of the quality of service required by users.

For example: - a typical voice telephone call might give a QoS parameter for throughput of 64kbps and delay less than 500msec. A user sending video might require throughput of 2Mbps.

PROVIDING DESIRED QoS:

QoS desires are specified at connection setup time and one never altered for the connection duration. Switches along the path must reserve resources to guarantee the QoS.

If a switch cannot provide the resources, it rejects the connection requests and an appropriate error message is returned.

© Copyright Virtual University of Pakistan

ATM QoS SPECIFICATIONS:

There are three types of QoS specifications, which are given as follows:

CONSTANT BIT RATE (CBR):

It is used for audio and video, since these have predefined maximum data rates.

VARIABLE BIT RATE (VBR):

It is used for compressed audio and video where the data rate depends on the level of compression that can be achieved.

AVAILABLE BIT RATE (ABR):

It is used for typical data applications (where the data rate may be unknown and bursty) and allows use of whatever bandwidth is available at a given time.

© Copyright Virtual University of Pakistan

Lecture No. 20

ATM AND NETWORK OWNERSHIP

CELLS VS PACKETS:

ATM designers chose cells over packets because of the following reasons:

- Cells are not variable length and memory management for them is simpler. Handling variable length packets leads to memory fragmentation.
- Variable length packets require hardware to accommodate the largest possible packet, and thus to detect the end of the packet. With cells bits can just be counted as they arrive.
- The length of time required to send a variable length packet is variable and requires complicated interrupt scheme to detect completion of transmission. QoS can't be guaranteed with variable length packets as easily as it can with fixed length cells.

ATM SPEED:

ATM designers also chose cells to meet the need for speed. Since it was designed to handle arbitrarily large numbers of users, each of which could be willing to pay for high throughput.

ATM is designed to work on fiber (but can be used with twisted pair). A typical port on an ATM switch operates at OC-3 speed (155Mbps) or higher.

ATM CRITIQUE:

ATM is far more expensive than typical LAN hardware. Connection setup time may be excessive for short communications. Cell tax consumes 10% of network capacity QoS requirements might be unknown, leading to applications picking values that are too high or too low.

Broadcast is inefficient and has to be simulated by sending the same message to each computer separately.

ATM as a single universal networking technology has only minimal provision for interoperation with other technologies.

© Copyright Virtual University of Pakistan

NETWORK OWNERSHIP:

There are two categories in this case:

PRIVATE NETWOK:

Single organization or company owns this. They are often LAN technologies. There can be multiple LANs in a building or campus linked together. They are sometimes called Intranet.

PRIVATE NETWORK ARCHITECTURE:

It operates autonomously from other networks (e.g. internet).
It usually includes one or few closely managed external connections. They may restrict access at connections.

MANAGING PRIVATE NETWORKS:

An organization buys its own equipment and hires staff to design, implement, maintain and upgrade network. It is responsible for all network management.

EXTENDING PRIVATE NETWORK:

The large organizations may have multiple buildings or campuses. They can only install cables on their own property. They may contract for leased lines from common carrier.

PUBLIC NETWORK:

This is owned by common carrier e.g. Phone Company. The public networks are those networks, which are operated by common carriers. It may be a telephone company or another organization that builds network out of leases lines. Multiple organizations subscribe and connect. Data transits public network to other organizations.

© Copyright Virtual University of Pakistan

ADVANTAGES AND DISADVANTAGES:

The advantages and disadvantages of Public and Private Networks are given in the table below:

NETWORKS	ADVANTAGES	DISADVANTAGES
PUBLIC	They are flexible.	There are no decision-making equipment or policies.
PRIVATE	The owner has complete control over both the technical decision and policies.	They are expensive to install and maintain.

© Copyright Virtual University of Pakistan

Lecture No. 21

NETWORK SERVICE PARADIGM

VIRTUAL PRIVATE NETWORK:

Virtual Private Network (VPN) combines the features of both private and public networks. It is limited to single organization and uses public network for connectivity.

These connections are sometimes called tunnels and connect sites. Each site sees tunnel as point-to-point link. There is no access for other users of public networks.

GUARANTEEING ABSOLUTE PRIVACY:

In addition to restricting packets, VPN systems use encryption to guarantee absolute privacy. Even if an outside does manage to obtain a copy of the packet the outside will be unable to interpret the contents.

SERVICE PARADIGM:

At the lowest level most networks transfer individual packets of data and the network requires each packet to follow an exact format dictated by the hardware, which is called Interface paradigms or service paradigms.
There are two types of service paradigms:

CONNECTION-ORIENTED:

It is similar to the telephone system: endpoints establish and maintain a connection as long as they have data to exchange.

CONNECTIONLESS:

Similar to postal system: endpoints put data to send into a packet and hand to network for delivery.

CONNECTION-ORIENTED SERVICE:

One endpoint requests connection from network. Other endpoint agrees to connection. Computers exchange data through connection. One-endpoint requests network to break connection when transmission is complete.

© Copyright Virtual University of Pakistan

CONTINUOUS AND BURST TRAFFIC:

Networks handling voice or video are engineered to accept and deliver continuous data at fixed rate. Others are designed to handle burst traffic typical of computer networks. Connection does not disappear when no data is sent.

Long Q

SIMPLEX & FULL DUPLEX CONNECTION:

Some connection-oriented technologies provide full duplex while other allow on simplex connection. To communicate using a simplex design a pair of computers must establish two connections one from computer A to computer B and another from computer B to A.

CONNECTION DURATION AND PERSISTANCE:

Connection can be made on demand set up permanently. There are two types:

- Switched Connection or Switched Virtual Circuit (SVC).
- Permanent Connection or Permanent Virtual Circuit (PVC).

Permanent connections are originally hardwired and now configured at system unit time. In switched connections, computer maintains permanent connection to network and networks make connections on demand. Internal components are switched networks is a switched data network.

SERVICE GUARANTEES:

Some connection-oriented networks provide guarantees about the service that computer will receive. They may guarantee a throughput rate maximum packet loss rate.

For example, ATM provides statistical guarantee about performance.

STREAM OR MESSAGE INTERFACE:

Some connection-oriented networks provide stream interfaces. In which no boundaries are recorded that receiver may receive a single block of 60 characters.

Others provide a message interface that delivers data in the same size chunks that the sender transmitted.

CONNECTIONLESS SERVICE:

In connectionless service, there is no connection necessary. The source of data adds destination information in data and delivers to the network. Network delivers each data item individually.

© Copyright Virtual University of Pakistan

INTERIOR AND EXTERIOR SERVICE PARADIGM:

A network providing one service paradigm to the attached computers can use an entirely different service paradigm internally.

For example ARPANET is connection oriented internally and connectionless externally.

COMPARISON:

CONNECTION-ORIENTED:

- Accounting is easier.
- Application can learn of network problems immediately.

CONNECTIONLESS:

- It has fewer overheads.
- It is easier to implement network.

An example of service paradigm is shown in the figure below.

Technology	Connection-Oriented	Connectionless	used for LAN	used for WAN
Ethernet		*	*	
Token Ring		*	*	
FDDI		*	*	
Frame Relay	*			*
SMDS		*		*
ATM	*		*	*
LocalTalk		*	*	

Figure 21.1

ADDRESSES AND CONNECTION IDENTIFIERS:

Address is a complete unique identifier. Connectionless delivery requires address on each packet.

Connection-oriented delivery can use a short hand that identifies the connection rather than the destination.

© Copyright Virtual University of Pakistan

As an example let's consider an ATM with 16-bit address, 24-bit connection identifier and connection identifier includes.

-8-bit Virtual Path Identifier (VPI)

-16-bit Virtual Circuit Identifier (VCI)

The connection identifier is local to each computer and it may be different at different parts of the ATM switch.

© Copyright Virtual University of Pakistan

Lecture No. 22

NETWORK PERFORMANCE

There are two types of characteristics in case of network performance.

- Delay
- Throughput

DELAY:

It is an important quantitative property of networks. Delay is a measure how long it takes for a bit of data to travel across the network from one compute to the other.
It is measured in seconds or fractions of seconds.

TYPES OF DELAY:

There are following types of delay:

PROPAGATION DELAY:

It defined as the time to travel across medium.

SWITCHING DELAY:

It is the time required for network component (hub, bridge, packet switch) to forward data.

ACCESS DELAY:

It is the time required to get control of medium (CSMA/CD, token).

QUEUING DELAY:

It is the time enquired in packet switches.

THROUGHPUT:

Throughput is a measure of the rate at which data can be sent through the network. The throughput capability of the underlying hardware is called bandwidth.

© Copyright Virtual University of Pakistan

Because each frame contains headers, the effective throughput is less than the hardware bandwidth.

Networking professional often use the term speed as a synonym for throughput.

RELATIONSHIP BETWEEN DELAY AND THROUGHPUT:

If a packet switch has a queue of packets waiting when a new packet arrives. The new packet will be placed on the entire queue and will need to wait while the switch forwards the previous packets.

Throughput and delay are not completely independent. As traffic in a computer network increase, delays increase a network that operates at close to 100% of its throughput capacity experiences severe delay.

DELAY THROUPUT PRODUCT:

It is computed as delay time multiplied by effective throughput. It measures amount of data that can be present in the network. In fast network with long delay times, sending computer can generate large amounts of data before destination receives first bit.

JITTER:

The amount of delay that a network introduces is called jitter. A network with zero jitter takes exactly the same amount of time to transfer each packet. A network with high jitter takes much longer to deliver some packets than others.

© Copyright Virtual University of Pakistan

AL-JUNAID TECH INSTITUTE

CS610-Computer Network

MIDTERM PATS PAPER

SOLVED by: JUNAID MALIK

AL-JUNAID TECH INSTITUTE

www.vulmshelp.com

AL-JUNAID TECH INSTITUTE
0304-1659294
www.vulmshelp.com

VU LMS HELP
vulmshelp.com

Language Courses Training Available

I'm providing paid courses in different languages within 3 Months,Certificate will be awarded after completion.

- HTML
- CSS
- JAVASCRIPT
- BOOTSTRAPS
- JQUERY
- PHP MYSQL
- NODES.JS
- REACT JS

LMS Handling Services

LMS Activities Paid Task

Assignments 95% Results

Quizes 95% Results

GDB 95% Results

For CS619 Project Feel Free To Contact With Me

Ph# 0304-1659294
Email: junaidfazal08@gmail.com

1. In Cyclic Redundancy Checking, CRC is _____.
a. Divisor
b. Quotient
c. Remainder page 20
d. Dividend
2. The satellite or radio topology in which all computers are connected to each other via satellite or radio wave is a kind of
a. Broadcast network page 5
b. Point-to-Point network
3. Which of the following two operations are performed by Ethernet CD?
I. It monitors outgoing signals.
II. Grabbled signal is interpreted as a collision.
III. Signals are sent back to the sender.

a. I and III
b. II and IV
c. II and III
d. I and II page 28
4. The process of forwarding a packet is called _____.
a. Routing page 58
b. Processing
c. Hierarchical Addressing
d. Source Addressing
4. Which statement is correct about Network Interface Card (NIC)?
I. NIC contains sufficient hardware to process data independent of system CPU
II. NIC looks like any other I/O device to system CPU III. NIC also receives interrupt on incoming data.
a. I and II
b. II and III
c. I and III
d. All of the given options page 40

AL-JUNAID TECH INSTITUTE 0304-1659294 www.vulmshelp.com

-

5. While transmitting data from source A to destination B, 4 bits are changed during the transmission then the error is a _____.

a. Burst error page 22
b. Single error
c. Double error
d. Logic error

6. The switch that has no attached computers is called _____.

a. Packet Switch
b. Exterior Switch
c. Interior Switch page 59
d. External Switch

7. _____ is the most popular wiring scheme because of lowest cost.

a. 5 Base T
b. 10 Base T page 43
c. 100 base T
d. 1000 base T

8. In _____ technique, all members of the network can send data only on the specific time slot?

a. CDMA
b. FDMA
c. CSMA page 43
d. TDMA

9. If a sender with a 100 Megabit NIC and receiver with 10 Megabit NIC wants to communicate with each other at which speed they can communicate?

a. 100 Megabit page 40
b. 110 Megabit
c. 1000 Megabit
d. 10 Megabit

9. Missing _____ in a frame format indicates receiving computer missed beginning of the message.

a. eot
b. soh page 16
c. sot
d. eoh

10. 1The _____ of errors is easier than the _____ of errors.

a. correction; detection
b. detection; correction cs601 handouts
c. correction; creation
d. detection; manipulation

-

10. 1The _____ of errors is difficult than the _____ of errors.
a. correction; detection google
b. detection; correction
c. correction; creation
d. detection; manipulation

11. 1Source Independence phenomenon allows fast and efficient _____.
a. Source Addressing
b. Routing
c. Packet Switching page 58
d. Store and forward

12. 1In distributed route computation process each packet switch computes its routing table locally and sends messages to the _____.
a. Router
b. Graph
c. Neighbors page 63
d. WAN

13. The ___ layer of the OSI model takes the data from the physical layer and perform error checking.
a. Transport
b. Data link google
c. Application
d. Presentation

14. 1 CBR stands for _____.
a. Constant Byte Rate
b. Constant Bit Rate
c. Connection break Recovery
d. Constant Borrow Rate

15. 1A network that uses _____ usually consist of a single long cable to which computer attach.
a. Star Topology
b. Ring Topology
c. Bus Topology page 26
d. Bus and Ring Topology

16. If simultaneous transmission occurs, the frames interfere with each other and this phenomenon is called _____.
a. packet loss
b. collision page 28
c. delayed transmission
d. coordination

-

16. In _____ all computers are attached to a central hub a. Ring topology
    b. Star topology page 31
    c. Hub topology
    d. Bus topology
17. For adding a new computer in a point to point network _____new connection

will be required
    a. N
    b. N-1 page 23
    c. N-2
    d. 2n

18. 1The fastest Ethernet hardware operates at a rate of _____
    a. 1000 bps
    b. 100 Mbps page 27
    c. 10 Mbps
    d. 1000 Mbps
18. Which of the following the benefit to point to point communication? a. Quick to configure
    b. Security implementation page 23
    c. Cost
    d. Less availability

19. 1 ATM offers _____speed and _____delay
    a. High, High
    b. High, low page 72
    c. Low, low
    d. Low, high

20. 1Thick Ethernet is known as _____
    a. 10 Base 2
    b. 10 Base 5 google
    c. 10 Base T
    d. 10 Base 10
21. Both interior and exterior switches _____packet and they also need routing tables.
    a. Create
    b. Delay
    c. Forward page 59
    d. Start

-

22. _____is the rate at which data can be sent through the network
    a. Throughput page 79
    b. Propagation delay
    c. Access delay
    d. Switching delay
23. In a ping command, small –sized information packets of _____are sent.
    a. TCP
    b. UDP
    c. ICMP page 11
    d. IGMP
24. Many WANs use _____addressing of efficiency
    a. Sequence
    b. Forward
    c. Hierarchical page 56
    d. Sequential
25. Which of the following is not a function of ping commends?
    a. Local computer network issue
    b. Congestion in the network
    c. Relay nodes page 11
    d. Remote host availability
26. Packet switched can be linked together to form a _____
    a. LAN
    b. WAN page 56
    c. Bridge
    d. None of the given option
27. Fixed network is a type of network which is classified with repect to the _____factor
    a. Size
    b. Connectivity
    c. Medium
    d. Mobility page 6
28. Parity bit can detect _____error(s)
    a. 4
    b. 3
    c. 2 page 19 (even or odd)
    d. 1

AL-JUNAID TECH INSTITUTE 0304-1659294 www.vulmshelp.com

-

29. When we will try to connect to the internet which of the following protocol will be used?
    a. Telnet
    b. TCP/IP page 84
    c. ICMP
    d. IPx
30. How many computers are mandatory to form a network?
    a. 1
    b. 2 google
    c. 4
    d. 8
31. _____ is standard wireless LAN that uses radio signals at 2.4GHz.
    a. IEEE 803.16
    b. IEEE 802.15
    c. IEEE 802.3
    d. IEEE 802.11 page 29
32. LAN interface hardware obeys _____ access rule.
    a. CSMA/CD page 34
    b. Round robin
    c. First come first served
    d. High priority
33. The most important task a bridge performs is _____.
    a. Packet switching
    b. Line controlling
    c. Noise controlling
    d. Frame filtering page 50
34. ATM uses small, fixed-sized packets called cells and each cell has _____ octets.
    a. 47
    b. 52
    c. 53 page 66
    d. 55
36. _____ can't be guaranteed with variable length packets as easily as it can with fixed length cells.
    a. Errors
    b. Noise
    c. Quality of Service page 72
    d. None of the given

-

37. Which multiplexing technique transmits digital signals?
    a. WDM
    b. FDM
    c. TDM page 15
    d. GSM
38. Connections in Asynchronous transfer mode are called _____.
    a. Virtual channels page 67
    b. Virtual Path Identifier
    c. Cells
    d. Cell tax
39. A _____ is a device that combines multiple signals and forwards into a single line.
    a. Modem
    b. Multiplexer page 41
    c. Repeater
    d. Layer 3 Switch
40. _____ is inflexible.
    a. Routing
    b. Searching
    c. Processing
    d. Static routing page 62
41. If a hub is used to connect many computers in a LAN, then only _____ computers can communicate at a given time.
    a. Three
    b. Two page 54
    c. Four
    d. One
42. _____ is the term used for variance in transmission delays.
    a. Friction
    b. Segment
    c. Checksum
    d. Jitter page 66
43. _____ is also called self healing network.
    a. ATM
    b. FDDI
    c. Token Ring page 46
    d. Frame relay

AL-JUNAID TECH INSTITUTE 0304-1659294 www.vulmshelp.com

-

44. _____ and _____ are the two frame types.
    a. Internal and external
    b. Single and dual
    c. Implicit and explicit
    d. Multicast and broadcast page 35
45. Bluetooth uses shared medium and _____ instead of coaxial cable.
    a. Radio waves page 29
    b. Infrared waves
    c. Micro waves
    d. Low frequency waves
46. Which of the following is not a guided medium?
    a. Twisted-pair cable
    b. Fiber-optic cable
    c. Atmosphere google
    d. Coaxial cable
47. As a result of ARPA research, the first network was established which was named as _____.
    a. INTERNETWORKING
    b. ARPNET
    c. ARPANET page 9
    d. PACKET NETWORK
48. Asynchronous transfer mode (ATM) can dynamically establish a _____.
    a. Switched virtual circuit page 70
    b. Virtual connection identifier
    c. Virtual path indicator
    d. None of the given options
49. A typical port on an ATM switch operates at _____ or _____ higher.
    a. OC-2 speed (155Gbps)
    b. OC-2 speed (1000Mbps)
    c. OC-3 speed (155Mbps) page 72
    d. OC-3 speed (100Gbps)
50. 10Base-T Ethernet is often called a _____.
    a. ring shaped star
    b. ring shaped bus
    c. star shaped bus page 46
    d. star shaped ring

-

51. _____ allows automatic updates.
    a. Dynamic routing page 62
    b. Static routing
    c. Routing
    d. Default routing
52. Handling variable length packets leads to memory _____.
    a. Fragmentation page 72
    b. Management
    c. Location
    d. Allocation
53. In order to forward a copy of frame, the bridge uses _____ address.
    a. Network
    b. Destination page 51
    c. IP
    d. Source
54. We may use _____ to extend local area network.
    a. Bridge, Router
    b. Bridge, Hub, Router
    c. Bridge, Hub, Repeater page 149
    d. Bridge, Hub, Repeater, Router
53. All of the given options are the types of delay except _____.
    a. Propagation
    b. Access
    c. Throughput page 79
    d. Queuing
54. While computing shortest path in a graph, next hop information is inserted into _____.
    a. Routing table page 62
    b. Trailer
    c. Header
    d. Register
55. LAN interface uses _____ to copy frame data directly from main memory
    a. DMA page 34
    b. FDDI
    c. Hard disk
    d. Flash

AL-JUNAID TECH INSTITUTE 0304-1659294 www.vulmshelp.com

-

56. The Gigabit Ethernet hardware operates at a rate of _____.
    a. 10 Mbps
    b. 100 Mbps
    c. 1000 Mbps reference book page 263
    d. 1000 Gbps

57. In the early resource sharing era, which resources were shared among users?
    a. Computation page 9
    b. Floppy Drives
    c. Hard Disk
    d. Printers

58. If two buildings are located far from each other then bridge, and _____ can be used to connect two LAN.
    a. Optical fiber page 51
    b. Ethernet modem
    c. Switch
    d. NIC

59. Which type of network consists of wireless connection of laptops in a university classroom?
    a. WAN
    b. MAN
    c. Fog
    d. LAN google

60. A typical bridge has _____.
    a. One NIC, a CPU a memory and a ROM.
    b. Two NICs, a CPU a memory and a ROM. page 50
    c. RAM, ROM and CPU.
    d. A cache memory, ROM and CPU.

61. _____ is used for compressed audio and video, where the data rate depends on the level of compression that can be achieved.
    a. Constant Bit Rate
    b. Stable Bit Rate
    c. Variable Bit Rate page 71
    d. Available Bit Rate

62. There are _____ types of data stuffing.
    a. 1
    b. 2 page 17
    c. 0
    d. 5

-

63. Dijkstra's algorithm can accommodate weights on _____ in graph.
    a. Nodes page62
    b. Edges
    c. Path
    d. Connections
64. _____ masks your IP address.
    a. Firewall
    b. Antivirus
    c. VPN
    d. Incognito mode
65. Static routing computes routing table information at _____ time.
    a. Load
    b. Boot page 62
    c. Execute
    d. One
66. _____ was the first automated tool required to see whether the given computer is online or not.
    a. Probing program
    b. PING program page 11
    c. status program
    d. None of the above
67. In which type of error detection, the arithmetic sum is calculated before and after the transmission of data at both communication ends?
    a. CRC
    b. Party
    c. Checksum page 19
    d. Hash Function
68. Computer sends a connection request to the _____ to which it is attached while establishing a switched virtual circuit
    a. Bridge
    b. Switch page 70
    c. VPI
    d. Virtual circuit
69. The bridges communicate with each other on the network and use _____ algorithm to decide which bridge will not forward frames if a cycle occurs.
    a. Djikstra
    b. Shortest path first
    c. Vector distance
    d. Distributed Spanning Tree page 53

-

70. Ethernet uses a _____ bit static addressing scheme in which each device is assigned a unique address by the manufacturer.
    a. 64
    b. 48
    c. 32
    d. 16
71. Weights on graph edges reflect cost of _____.
    a. Nodes
    b. Traversing edge page 63
    c. Trending edge
    d. Path
72. A _____ relies on the hardware manufacturer to assign a unique physical address to each network interface.
    a. Static addressing scheme page 34
    b. Configurable addressing scheme
    c. Dynamic addressing scheme
    d. None of the given
73. In _____ topology, if the switch goes down all the computers will be disconnected.
    a. Star
    b. Ring
    c. Bus
    d. Mesh
74. Which type of network consists of wired computers in a university classroom?
    a. MAN
    b. PAN
    c. WAN
    d. LAN
75. If you as a network administrator want to know the traffic flow of your data while communicating with a remote computer which of the following will be used to know about intermediate routers?
    a. Ipconfig
    b. Ping page 11
    c. Traceroute
    d. Arp
76. Hardware address is also called _____.
    a. Physical address
    b. Logical address
    c. IP address
    d. Port address

-

77. Thick Ethernet also requires _____ to avoid signal reflectance.
    a. Transceivers
    b. AUI cable
    c. Drop cable
    d. Terminators page 41
78. Which of the following network is using the TCP/IP model globally?
    a. PAN
    b. SAN
    c. LAN
    d. The Internet
79. VPNs connections are sometimes called _____.
    a. Tunnels page 75
    b. Open networking
    c. Routing
    d. Public network
80. To reduce _____ computers can be connected and distributed to a number of hubs, then the hubs can be connected to a switch.
    a. Costs page 54
    b. Quality
    c. Efficiency
    d. Noise
81. If a _____ is used the communication between two computers will not affect the other pair of computers and they can communicate at the same time
    a. Hub
    b. Switch page 54
    c. Repeater
    d. Amplifier
82. The length of hardware address is _____.
    a. One to ten bytes
    b. One to five bytes
    c. One to six bytes page 34
    d. One to seven bytes
83. A network analyzer is also called _____.
    a. Network manager
    b. Network administrator
    c. Network monitor page 37
    d. Network

-

84. No any error detection scheme is perfect because transmission errors can affect _____.
   a. Data
   b. Additional Information
   c. Additional information & data google
   d. Transmission medium

85. The token ring network topology is a ring but wiring topology is a _____.
   a. Star page 44
   b. bus
   c. tree
   d. mesh

86. _____ addresses are used in an ethernet frame.
   a. IP page 99
   b. Port
   c. Logical
   d. MAC

87. AUI cable connects from NIC to _____.
   a. BNC Connector
   b. RJ-45 Connector
   c. Transceiver page 41
   d. Terminator

88. Public networks are _____.
   a. More secure than LAN
   b. Flexible page 74
   c. Limited in boundary
   d. Intranet

89. The maximum cable length of a LAN is fixed because _____.
   a. Additional hardware are not suitable for the LAN extension.
   b. The electrical signal level gets weaker as it travels. Page 48
   c. Additional software are not suitable for the LAN extension
   d. The electrical signal level gets stronger as it travels.

90. In _____.network topology is separated from route computation.
   a. Local area
   b. Link-state routing page 64
   c. Static routing
   d. Dynamic routing

-

91. Which layer of the OSI Model directly communicates and controls the transmission medium:
    a. Transmission
    b. Physical
    c. Application
    d. Network

92. In _____ technique data is treated as a sequence of integers and their arithmetic sum is computed and the carry bits are added to the final sum.
    a. CRC
    b. Bit stuffing
    c. Checksum page 19
    d. 2D Parity

93. A network with _____ jitter takes more time to deliver some packets than others.
    a. Zero
    b. High page 80
    c. Low
    d. Moderate

94. A network uses _____ to arrange computers in a single closed loop.
    a. Star Topology
    b. Mesh Topology
    c. Ring Topology page 25
    d. Bus Topology

95. Which of the following tasks is not done by the second layer of the OSI model?
    a. Flow control
    b. Framing
    c. Channel coding google
    d. Error control

96. ATM is a single technology designed to meet the goals of both _____ and _____.
    a. LAN & PAN
    b. LAN & WAN page 66
    c. LAN & MAN
    d. MAN & WAN

97. LAN and WAN are classified according to their _____.
    a. Size page 4
    b. Connectivity
    c. Medium
    d. Mobility

-

98. The identifier that is used for data transfer in the virtual circuit network is called _____.

a. Virtual circuit identifier
b. Global address
c. Network identifier
d. IP identifier

99. In Direct point to point communication adding the Nth computer requires _____ new connections

e. N^2
f. N-1
c. (N^2 -N)/2 page 23
d. N (N-1)

100. Which of the following is the correct function of bridge?

a. MTU path discovery
b. Byte stuffing
c. Routing information
d. Filtering and forwarding a frame page 50, 51

Point to point topology is

a. Size based
b. Mobility based
c. Connectivity based page 5
d. Medium based

101. IEEE LLC / SNAP header is _____which is used to specify the type of date.

a. 8 octets google
b. 16 octets
c. 32 octets
d. 64octets

102. IEEE LLC / SNAP header is _____which is used to specify the type of date.

a. CRC
b. Bit stuffing
c. Checksum
d. 2D Parity

103. What is the largest network in existence?

a. The internet google
b. A PAN
c. A Fog
d. Edge Network

-

104. The frame format of any LAN technology must consists of ____ and___-

a. Payload and CRC
b. Frame header and CRC
c. Payload and Frame type
d. Frame header and payload page 36

105. _____ can occur a LANs when a packet is delayed because the network is busy

a. Jitter page 66
b. Loop
c. Deadlock
d. variance

106. Which of the following cannot be used to extend a LAN?

a. Repeaters
b. Switches
c. Routers
d. Fiber modems

107. Links-state algorithm is used in _____

- **RIP**
- **IGRP**
- **RIPv2**
- **OSPF page 64**

108. **According to size, there are ___classifications of networks**

a. 2 page 2
b. 3
c. 4
d. 5

108. In which topology terminators are used at the end of the cable?

a. Star
b. Bus
c. Ring
d. Mesh

109. 1Switch simulates a _____LAN connecting segments

e. Single
f. Single shared
c. Bridged page 54
d. Complex

110. 1PVS stands for _____

a. Permanent virtual circuit page 69
b. Private virtual circuit
c. Public virtual circuit

-

d. Plastic virtual circuit

111. Hardware that calculates a CRC used two simple components _____

a. AND unit and XOR Unit

b. Shift register and XOR unit page 20

c. Shift register & AND unit

d. Shift register and Shift XCR unit

112. Thin ethernet is known as _____

a. 10 base 2 google

b. 10 base 5

c. 10 base T

d. All of the above

113. If a sender with a 1 Gigabit NIC and receiver with 100 Megabit NIC wants to communicate with each other than at which speed they can communicate

a. 11 Megabit

b. 100 Megabit

c. 1 Gigabit

d. 1.1 Gigabit

114. _____ is used as an alternative of packet for a specific computer network technology

e. Datum

f. Token

g. Ether

d. Frame page 14

115. The sharing of a medium and its link by two or more devices is called ____

a. Modulation

b. Encoding

c. Multiplexing

d. Line discipline

116. The topology each computer is connected to a central hub is called

e. Ring topology

b. Star topology page 5

c. Tree topology

d. Mesh topology

117. Asynchronous transfer mode (ATM) is designed to work on fiber but can be used with _____

a. wireless

b. Twisted pair page 72

c. Wifi

d. Bluetooth

-

118. The basic responsibility of NIC is _____
a. To access medium network
b. To resource allocation
c. To access memory
d. All of the given option
119. 1Frame relay is ____
a. Connection oriented service page 64
b. Connectionless service
c. Typically ranges for 5 Mbps to 1000Mbps
d. Call based
120. The length of time required to send a variable length packet is ____
a. 5 second
b. Variable page 72
c. Constant
d. Fix
121. ABR stands for _____
a. Asynchronous bit rate
b. Asynchronous byte recovery
c. Asynchronous bit redundancy
d. Available bit rate page 71
122. In Token Ring, if all computers are ready to transmit it enforces _____access
a. First come first served
b. Round Robin page 30
c. Shorter delay
d. Last come first served
123. The Ethernet standard specifies that frames are sent using the _____scheme.
a. Differential Manchester
b. Not Return to Zero (NR2)
c. Manchester Encoding page 27
d. Return to Zero (RZ)
124. ATM uses the concept of _____.
a. Connection-oriented page 66
b. Connection-less
c. variable packet size
d. Fixed and variable packet size

-

124. 1Which of the following is a benefit of point to point communication?
a. Quick to configure
b. Security implementation
c. Cost
d. Less availability
125. _____ is not used to extend LAN.
e. Hub
f. Fiber modem
g. Repeater
h. Bridge
126. Which types of VPNs are used for corporate connectivity across companies residing in different geographical locations?
i. Remote access VPNs
j. Peer-to-peer VPNs
k. Country-to-country VPNs
d. Site-to-site VPNs google

127. Star topology is the kind of
- Tree topology
- b. Point-to-point topology page 05
- Broadcast topology
- Ring topology

127. In a _____ state, a bridge allows simultaneous use of each segment.
- Ready
- Steady
- Final
- Startup

128. The network occupies larger areas like cities & countries is called
- LAN
- WAN
- MAN
- All of the above

129. In link state routing _____ send link-state information about local connections.
- Bridges
- Switches
- Routers
- Hubs

-

130. Transmission media are usually categorized as _____.
- Guided or unguided
- Fixed or unfixed
- Determinate or indeterminate
- Metallic or nonmetallic

131. Even parity can be used to check for _____ bit/ bits of errors.
- a. 1 page 18
- 2
- 3
- 0

132. Routing table entries can be _____ with a default route.
- Collapsed
- Redirected
- Emerged
- Guaranteed

133. The system administrator must coordinate to avoid the conflict in _____ hardware addressing scheme.

a. Static
b. Dynamic
c. Configurable
d. Fixed

134. _____ network does not depend on CSMA/CD.
- Ethernet
- Fast Ethernet
- Gigabit Ethernet
- Wireless

135. Which of the following technologies can extend the diameter of LAN medium?
- Fiber optic
- Repeater
- Diameter of LAN medium is not extendable
- Both. Fiber optic and Repeaters

136. Connections are formed in Asynchronous transfer mode by starting values in_____ in ATM switches, as opposed to making actual electrical connections.
- Heap
- Stack
- Virtual Circuit
- d. Memory locations page 67

-

137. The _____ scheme must be reliable to prevent conflicts. a. Static
b. Dynamic page 34
c. Configurable
d. Fixed
138. Metropolitan area network is used for _____.
a. City page 55
b. Building
c. Country
d. Continent
139. Which addressing can be only used in the local area networks?
- a. IP google
- Physical
- Port
- Protocol

139. The sharing of a _____ among the workers in an office is a goal of resource sharing.
a. Mouse
b. Printer page 9
c. Keyboard
d. Motherboard
140. ATM uses fixed size, small cells, 48 octet's data and _____.
a. 3 Octets header
b. 5 Octets header page 65
c. 6 Octets header
d. 7 Octets header
141. Which of the followings is not an advantage of framing?
a. Missing eot indicates sending computer crashed
b. Missing soh indicates receiving computer missed beginning of message
c. Delimiters do not contain any user data page 16
d. Bad frame is discarded
142. The _____ field of Ethernet frame has the purpose of receiver synchronization.
a. Preamble page 36
b. Frame Type
c. Data
d. CRC

Q1: Internet Standards Specifies that any two stations cannot be separated by more than _____ Repeaters.

A) Three
B) Four (100% Sure)
C) Five
D) Six

Q2: A typical port on an ATM switch operates at _____ or higher.
A) OC-2 speed (155Gbps)
B) OC-2 speed (1000Mbps)
C) OC-3 speed (155Mbps) (100% Sure)
D) OC-3 speed (100Gbps)

Q3: Ethernet uses a _____ bit static addressing scheme in which each device is assigned a unique address by the manufacturer.
A) 64
B) 48 (100% Sure)
C) 32
D) 8

Q4: Which one is incorrect statement?
A) Hub wiring centralizes electronics and connections. It makes management easier.
B) No Transceiver allows computer to be powered off or disconnected from network without distracting other communication. (100% Sure)
C) Transceiver may be located in an inconvenient place in any situation
D) None of these

Q5: ATM is also called _____.
A) Label rewriting
B) Label switching system
C) label rewriting and label switching system
D) All of above (100% Sure)

Q6: The most important task a bridge performs is _____.
A) Packet switching
B) Line controlling

C) Noise controlling
D) Frame filtering (100% Sure)

Q7: Which of the following statement is true regarding Jitter?
A) Jitter is used for variance in transmission delays.
B) Jitter can occur when a packet is delayed.
C) Jitter is significance for voice, video and data
D) All of the obove (100% Sure)

Q8: Which of the following is a benifit of source independence?
A) It allows fast and efficient routing
B) Packet switch do not need to have complete information about all destinations
C) Network functions even if topology changes
D) All of the above (100% Sure)

Q9: The term signaling is used to describe _____.
A) Communication about the internet
B) Communication about the extranet
C) Communication about the network (100% Sure)
D) None of above

Question No: 1
No error detection scheme is perfect because transmission errors can affect the additional information as well as the data.

► **True**
► False

Question No: 2
------ Program sends a message to a remote computer and reports whether the computer responds.

► **Ping**
► Traceroute
► ICMP
► Non of the given

Question No: 3 ---------- was especially concerned about the lack of high powered computers.

► **ARPA (Computer Networks and Internets, page5)**
► IEEE
► EIA
► Non of the given

Question No: 4
The term--------- is used to denote the definition of a packet used with a specific type of network.
► Packet
► **Frame (Computer Networks and Internets, page 73)**
► Data
► None of the given

Question No: 5
Computer networks are often called---------- because they use packet technology.

► Ethernet
► Switch networks
► **Packet networks (Computer Networks and Internets, page 73)**
► None of the given

Question No: 6
---------- have advantages arisen from the size and ease of computation.

► CRC
► **Parity (Page 19)**
► Checksums
► None of given

Question No: 7
Most LANs that employ ring topology use an access mechanism known as-------

► CSMA/CD
► CSMA/CA
► **TOKEN PASSING (Computer Networks and Internets, page95)**
► None of the given

Question No: 8 (M a r k s: 1)
IEEE LLC/SNAP header is--------, which is used to specify the type of data.

► **8 octets**
► 8 bytes
► 8 bits
► None of the given

Question No: 9
Formally named informally known as the twisted pair Ethernet or TP Ethernet.

► 10 Base 2
► 10 Base 5
► **10 Base T (Page 43)**
► None of the given

Question No: 10
An interface for twisted pair Ethernet must have an connector , and must generate signals according to the specification.

► **RJ-45, 10 Base T (Computer Networks and Internets, page 126)**
► RJ-45, 10 Base 5
► BNC, 10 Base 2
► BNC, 10 Base T

Question No: 11
A bridges function in the layers(s).

► **Physical (MAC)**
► Data link
► Network
► Physical (MAC) and Data link

Question No: 12
A Bridge can

► Filter a frame
► Forward a frame
► Extend a LAN
► **Do all the above**

Question No: 13
A Bridge forwards or filters a frame by comparing the information in its address table to the frame's

► Layer 2 source address
► Source node's physical address
► **Layer 2 destination address**
► Layer 3 destination address

Question No: 14

computes shortest paths in a graph by using weights on edges as a measure of distance.

► Greedy algorithm
► Distance vector algorithm
► **Dijksta's algorithm (Computer Networks and Internets, page112)**
► Non of the given

Question No: 15

is used for audio and video, since these have predefined maximum data rates

► **Constant Bit Rate (CBR) service (Page 71)**
► Variable Bit Rate (VBR) service
► Available Bit Rate (ABR) service
► None of the given

Question No: 16

Unlike Frame Relay and ATM, SMDS (Switched multi-megabit Data service) offers .

► **Connectionless service paradigm (Computer Networks and Internets, page112)**
► Connection oriented service paradigm
► Both Connectionless and Connection-oriented service paradigm
► None of the given

Question No: 17

A network with throughput T and delay D has a total of bit in transit at any time.

► T / D
► **T x D (Computer Networks and Internets, page203)**
► T + D
► None of the given

Question No: 18

ATM is designed to work on .

► Twisted Pair
► Coaxial
► Radio Frequency
► **Fiber (Computer Networks and Internets, page 72)**

Question No: 19

Computers attached to an Ethernet use ------ in which a computer waits for the ether to be idle before transmitting a frame.

► **CSMA/CD (Computer Networks and Internets, page 93)**

► CSMA/CA
► TOKEN PASSING
► None of the given

Question No: 20
FDDI can transmits data at a rate of ----------

► **100 million bits per second (Page 314)**
► 10 million bits per second
► 1000 million bits per second
► None of the given

Question No: 21
In Point-to-Point topology there are two topologies.

► Star and Tree
► Tree and Ring
► Star and Ring
► **Star and Tree (Page 5)**
► None of the given

Question No: 22
------ Program sends a message to a remote computer and reports whether the computer responds.

► **Ping (Computer Networks and Internets, page9)**
► Traceroute
► ICMP
► Non of the given

Question No: 23
------ has no way to determine the cause of the problem.

► ICMP
► **Ping (Computer Networks and Internets, page 11)**
► Trace route
► Non of the given

Question No: 24
The term ----------refers to the general concept of a small block of data

► **Packet (Page 16)**
► Frame
► Data

► None of the given

Question No: 25
---------- scheme, which is designed to help detect transmissions errors, send one extra bit of information with each character

► **Parity (Computer Networks and Internets, page 77)**
► Checksums
► CRC
► None of given

Question No: 26
Local Talk is a LAN technology that employs ----------

► **Bus topology (Page 30)**
► Ring topology
► Star topology
► None of the given

Question No: 27
Most LANs that employ ring topology use an access mechanism known as-------

► CSMA/CD
► CSMA/CA
► **TOKEN PASSING (Computer Networks and Internets, page95)**
► None of the given

Question No: 28
Ethernet uses a-------bit static addressing scheme in which each device is assigned a unique address by the manufacturer.

► 64
► **48 (Computer Networks and Internets, page 109)**
► 32
► 8

0304-1659294

Question No: 29
Formally named informally known as the thick wire Ethernet or Thick net.

► 10 Base 2
► **10 Base 5 Computer Networks and Internets, page 120)**
► 10 Base T
► None of the given

Question No: 30
Formally named informally known as the twisted pair Ethernet or TP Ethernet.

► 10 Base 2
► 10 Base 5
► **10 Base T (Page 43)**
► None of the given

Question No: 31
The maximum size of an Ethernet segment is

► 250 meters
► **500 meters (Page 27)**
► 700 meters
► None of the given

Question No: 32
A Bridge can

► Filter a frame
► Forward a frame
► Extend a LAN
► **Do all the above**

0304-1659294
www.vulmshelp.com

Question No: 33
computes shortest paths in a graph by using weights on edges as a measure of distance.

► Greedy algorithm
► Distance vector algorithm
► **Dijksta's algorithm (Computer Networks and Internets, page112)**

Question No: 34
is used for compressed audio and video where the data rate depends on the level of compressionthat can be achieved.

► Constant Bit Rate (CBR) service
► **Variable Bit Rate (VBR) service (Page 71)**
► Available Bit Rate (ABR) service
► None of the given

Question No: 35
Basic LAN technologies such as Ethernet, Token Ring, and FDDI use a .

► **Connectionless service paradigm (Computer Networks and Internets, page112)**
► Connection-oriented service paradigm
► Both Connectionless and Connection-oriented service paradigm
► None of the given

Question No: 36
The product of delay and throughput measures the of data that can be present on the network.

► Area
► **Volume (Page 80)**
► Length
► None of the given

Question No: 37
A network with throughput T and delay D has a total of bit in transit at any time.

► T / D
► **T x D (Computer Networks and Internets, page203) rep**
► T + D
► None of the given

Question No: 38
One repeater two repeaters the maximum cable length limitation.

► **doubles, triple (Page 49)**
► square roots, cude roots

► and, triple
► doubles, cancel

Question No: 39
A network uses a------- if all computers attach to a central point

► **Star Topology (Page 25)**
► Ring Topology
► Bus Topology
► None of the given

Question No: 40
Computers attached to an Ethernet use------- in which a computer waits for the other to be idle before
transmitting a frame.

► **CSMA/CD (Computer Networks and Internets, page 93)**
► CSMA/CA
► TOKEN PASSING
► None of the given

AL-JUNAID TECH INSTITUTE
0304-1659294
www.vulmshelp.com

-

CS-610 Digital Logical Design Update MCQS For Mid Term Solve By Vu Topper RM

80 To 100% Marks

Question No:1 (Marks:1) Vu-Topper RM
Uses counter rotating rings in which data flows in opposite directions.

A. FDDI Page 31
B. IBM
C. DMS

Question No:2 (Marks:1) Vu-Topper RM
The Ethernet speed was originally 3Mbps, and the current standard is ……. the fast Ethernet operates at 100Mbps.

A. 10Mbps Page27
B. 20Mbps
C. 30mbps

Question No:3 (Marks:1) Vu-Topper RM
Mapping between a protocol address and a hardware address is called

A. Segmentation
B. Hashing
C. Address Resolution Page 93

Question No:4 (Marks:1) Vu-Topper RM
Protocols of TCP/IP layering model specify how to organize data into frame and how a computer transmits frames over a network.

A. Session
B. Network interface layer
C. Internet Layer

Question No:5 (Marks:1) Vu-Topper RM
In Closed-form computation, the protocol address assigned to a computer is chosen carefully so that computer's hardware address can be computed from the
protocol address using basic Boolean and operations.

A. Arithmetic Page 94
B. XOR
C. Shift

For More Help Vu Topper RM Contact What's app 0322-4021365

Question No:6 (Marks:1) Vu-Topper RM

As the Internet grew, the original Classful addressing scheme became a limitation. The IP address space was being exhausted because all networks had to choose one
of possible sizes.

A. One
B. Two
C. Three Page 90

Question No:7 (Marks:1) Vu-Topper RM

Dotted decimal notation is a syntactic form the IP software uses to express binaryvalues when interacting with humans.

A. 32-bit Page 87
B. 16-bit
C. 8-bit

Question No:8 (Marks:1) Vu-Topper RM

Protocols of TCP/IP layering model specify how to ensure reliable transfer.

A. Physical Layer
B. Network Interface Layer
C. Transport Layer

Question No:9 (Marks:1) Vu-Topper RM

In the IP address---identifies an individual computer on the network.

A. Prefix
B. Suffix
C. Mux

Question No:10 (Marks:1) Vu-Topper RM

Internet protocol (IP) address version 4 is comprised of --- bits.

A. 48
B. 32
C. 24

Question No:11 (Marks:1) Vu-Topper RM

A separate table is used for each physical network.bit-binding

A. Checksum

For More Help Vu Topper RM Contact What's app 0322-4021365

B. Address-binding

Question No:12 (Marks:1) Vu-Topper RM
Inside a computer, each address mask is stored as a --- value.

A. 32 Page 91
B. 48
C. 36

Question No:13 (Marks:1) Vu-Topper RM
Dotted decimal represents each octet in -----and uses a dot to separate octets.

A. Decimal Page 87
B. Octal

Question No:14 (Marks:1) Vu-Topper RM
TCP/IP Protocol Suit specifies the format of packets sent across Internet aswell as the mechanisms used to

A. Physical Layer
B. Data Link Layer
C. Internet Layer

Question No:15 (Marks:1) Vu-Topper RM
The IP class scheme does not divide the address space into equal size class and the classes do not contain the same number of networks.

A. 32-bit Page 88
B. 16-bit
C. 8-bit

Question No:16 (Marks:1) Vu-Topper RM
TCP/IP protocol suit defines the basic characteristics of network hardware.

A. Physical Layer
B. Data Link Layer
C. Internet Layer

Question No:17 (Marks:1) Vu-Topper RM
The protocol address of the next hop must be------to an equivalent hardware address before a packet can be sent.

For More Help Vu Topper RM Contact What's app 0322-4021365

A. Encrypted
B. Decrypted
C. Translated Page 93

Question No:18 (Marks:1) Vu-Topper RM
Address Resolution Protocol is mostly used to bind a 32-bit IP address to an _ Ethernet address.
A. 16-bit
B. 48-bit
C. 64-bit

Question No:19 (Marks:1) Vu-Topper RM
TCP/IP defines the term to refer any computer system that connects to a network and runs applications for users.
A. Router
B. Host computer Google
C. Bridge

Question No:20 (Marks:1) Vu-Topper RM
There are two standard implementations to improve computational efficiency:
A. Hashing and Direct indexing Page 94
B. Segmentation and Fragmentation
C. Queuing and Packetizing

Question No:21 (Marks:1) Vu-Topper RM
In the IP address identifies the physical network to which the computer is attached.
A. PREFIX Page 85
B. SUFFIX
C. Mux

Question No:22 (Marks:1) Vu-Topper RM
In Cyclic Redundancy Checking, CRC is _____.
A. Divisor
B. Quotient
C. Remainder Page 20
D. Dividend

For More Help Vu Topper RM Contact What's app 0322-4021365

Question No:23 (Marks:1) Vu-Topper RM

The satellite or radio topology in which all computers are connected to each other via satellite or radio wave is a kind of

A. **Broadcast network Page 5**
B. Point-to-Point network
C. Many-to-One network
D. Face-to- Face network

Question No:24 (Marks:1) Vu-Topper RM

Which of the following two operations are performed by Ethernet CD?
I. It monitors outgoing signals.
II. Grabbled signal is interpreted as a collision.
III. Signals are sent back to the sender.

A. I and III
B. II and IV
C. II and III
D. **I and II Page 28**

Question No:25 (Marks:1) Vu-Topper RM

The process of forwarding a packet is called _____.

A. **Routing Page 58**
B. Processing
C. Hierarchical Addressing
D. Source Addressing

Question No:26 (Marks:1) Vu-Topper RM

Which statement is correct about Network Interface Card (NIC)?
I. NIC contains sufficient hardware to process data independent of system CPU
II. NIC looks like any other I/O device to system CPU
III. NIC also receives interrupt on incoming data.

A. I and II
B. II and III
C. I and III
D. **All Page 40**

For More Help Vu Topper RM Contact What's app 0322-4021365

Question No:27 (Marks:1) Vu-Topper RM

While transmitting data from source A to destination B, 4 bits are changed during the transmission then the error is a _____.

A. **Burst error Page 22**
B. Single error
C. Double error
D. Logic error

Question No:28 (Marks:1) Vu-Topper RM

The switch that has no attached computers is called _____.

A. Packet Switch
B. Exterior Switch
C. **Interior Switch Page 59**
D. External Switch

Question No:29 (Marks:1) Vu-Topper RM

_____ is the most popular wiring scheme because of lowest cost.

A. 5 Base T
B. **10 Base T Page 43**
C. 100 base T
D. 1000 base T

Question No:30 (Marks:1) Vu-Topper RM

In _____ technique, all members of the network can send data only on the specific time slot?

A. CDMA
B. FDMA
C. **CSMA Page 43**
D. TDMA

Question No:31 (Marks:1) Vu-Topper RM

If a sender with a 100 Megabit NIC and receiver with 10 Megabit NIC wants to communicate with each other at which speed they can communicate?

A. 110 Megabit
B. 1000 Megabit
C. 10 Megabit
D. **100 Megabit Page 40**

For More Help Vu Topper RM Contact What's app 0322-4021365

Question No:32 (Marks:1) Vu-Topper RM
Missing _____ in a frame format indicates receiving computer missed beginning of the message.

A. eot
B. sot
C. eoh
D. soh Page 16

Question No:33 (Marks:1) Vu-Topper RM
The _____ of errors is easier than the _____ of errors.

A. Correction; detection
B. Correction; creation
C. Detection; manipulation
D. Detection; correction Google

Question No:34 (Marks:1) Vu-Topper RM
The _____ of errors is difficult than the _____ of errors.

A. Detection; correction
B. Correction; creation
C. Detection; manipulation
D. Correction; detection Google

Question No:35 (Marks:1) Vu-Topper RM
Source Independence phenomenon allows fast and efficient _____.

A. Source Addressing
B. Routing
C. Packet Switching Page 58
D. Store and forward

Question No:36 (Marks:1) Vu-Topper RM
In distributed route computation process each packet switch computes its routing table locally and sends messages to the _____.

A. Router
B. Graph
C. Neighbors Page 63
D. WAN

For More Help Vu Topper RM Contact What's app 0322-4021365

Question No:37 **(Marks:1)** **Vu-Topper RM**

The ___ layer of the OSI model takes the data from the physical layer and perform error checking.

A. Transport
B. Data link **Google**
C. Application
D. Presentation

Question No:38 **(Marks:1)** **Vu-Topper RM**

CBR stands for _____.

A. Constant Byte Rate
B. Constant Bit Rate **Page 71**
C. Connection break Recovery
D. Constant Borrow Rate

Question No:39 **(Marks:1)** **Vu-Topper RM**

VBR stands for _____.

A. Variable Byte Rate
B. Variable Bit Rate **Page 71**
C. Variable break Recovery
D. Variable borrow Rate

Question No:40 **(Marks:1)** **Vu-Topper RM**

ABR stands for _____.

A. Available Byte Rate
B. Available Bit Rate **Page 71**
C. Available break Recovery
D. Available Borrow Rate

Question No:41 **(Marks:1)** **Vu-Topper RM**

A network that uses _____ usually consist of a single long cable to which computer attach.

A. Star Topology
B. Ring Topology
C. Bus Topology **Page 26**
D. Bus and Ring Topology

For More Help Vu Topper RM Contact What's app 0322-4021365

Question No:42 (Marks:1) Vu-Topper RM

If simultaneous transmission occurs, the frames interfere with each other and this phenomenon is called _____.

A. packet loss
B. collision Page 28
C. delayed transmission
D. coordination

Question No:43 (Marks:1) Vu-Topper RM

In _____ all computers are attached to a central hub

A. Ring topology
B. Star topology Page 31
C. Hub topology
D. Bus topology

Question No:44 (Marks:1) Vu-Topper RM

For adding a new computer in a point-to-point network _____new connection will be required

A. N
B. N-1 Page 23
C. N-2
D. 2N

Question No:45 (Marks:1) Vu-Topper RM

The fastest Ethernet hardware operates at a rate of _____

A. 1000 bps
B. 100 Mbps Page 27
C. 10 Mbps
D. 1000 Mbps

Question No:46 (Marks:1) Vu-Topper RM

Which of the following the benefit to point to point communication?

A. Quick to configure
B. Security implementation Page 23
C. Cost
D. Less availability

For More Help Vu Topper RM Contact What's app 0322-4021365

Question No:47 **(Marks:1)** **Vu-Topper RM**
ATM offers _____speed and _____delay
A. High, High
B. High, low **Page 72**
C. Low, low
D. Low, high

Question No:48 **(Marks:1)** **Vu-Topper RM**
Thick Ethernet is known as _____
A. 10 Base 2
B. 10 Base 5 **Google**
C. 10 Base T
D. 10 Base 10

Question No:49 **(Marks:1)** **Vu-Topper RM**
Both interior and exterior switches _____packet and they also need routing tables.
A. Create
B. Delay
C. Forward **Page 59**
D. Start

Question No:50 **(Marks:1)** **Vu-Topper RM**
_____is the rate at which data can be sent through the network
A. Throughput **Page 79**
B. Propagation delay
C. Access delay
D. Switching delay

Question No:51 **(Marks:1)** **Vu-Topper RM**
In a ping command, small –sized information packets of _____are sent.
A. TCP
B. UDP
C. ICMP **Page 11**
D. IGMP

For More Help Vu Topper RM Contact What's app 0322-4021365

Question No:52 (Marks:1) Vu-Topper RM

Many WANs use _____addressing of efficiency

A. Sequence
B. Forward
C. Hierarchical Page 56
D. Sequential

Question No:53 (Marks:1) Vu-Topper RM

Which of the following is not a function of ping commends?

A. Local computer network issue
B. Congestion in the network
C. Relay nodes Page 11
D. Remote host availability

Question No:54 (Marks:1) Vu-Topper RM

Packet switched can be linked together to form a _____

A. LAN
B. WAN Page 56
C. Bridge
D. None

Question No:55 (Marks:1) Vu-Topper RM

Fixed network is a type of network which is classified with repect to the factor

A. Size
B. Connectivity
C. Medium
D. Mobility Page 6

Question No:56 (Marks:1) Vu-Topper RM

Parity bit can detect _____error(s)

A. 4
B. 3
C. 2 Page 19
D. 1

For More Help Vu Topper RM Contact What's app 0322-4021365

Question No:57 (Marks:1) Vu-Topper RM

When we will try to connect to the internet which of the following protocol will be used?

A. Telnet
B. TCP/IP Page 84
C. ICMP
D. IPx

Question No:58 (Marks:1) Vu-Topper RM

How many computers are mandatory to form a network?

A. 1
B. 2 Google
C. 4
D. 8

Question No:59 (Marks:1) Vu-Topper RM

_____ is standard wireless LAN that uses radio signals at 2.4GHz.

A. IEEE 803.16
B. IEEE 802.15
C. IEEE 802.3
D. IEEE 802.11 Page 29

Question No:60 (Marks:1) Vu-Topper RM

LAN interface hardware obeys _____ access rule.

A. CSMA/CD Page 34
B. Round robin
C. First come first served
D. High priority

Question No:61 (Marks:1) Vu-Topper RM

The most important task a bridge performs is _____.

A. Packet switching
B. Line controlling
C. Noise controlling
D. Frame filtering Page 50

For More Help Vu Topper RM Contact What's app 0322-4021365

Question No:62 (Marks:1) Vu-Topper RM
ATM uses small, fixed-sized packets called cells and each cell has _____ octets.

A. 47
B. 52
C. 53 Page 66
D. 55

Question No:63 (Marks:1) Vu-Topper RM
_____ can't be guaranteed with variable length packets as easily as it can with fixed length cells.

A. Errors
B. Noise
C. Quality of Service Page 72
D. None of the given

Question No:64 (Marks:1) Vu-Topper RM
Which multiplexing technique transmits digital signals?

A. WDM
B. FDM
C. TDM Page 15
D. GSM

Question No:65 (Marks:1) Vu-Topper RM
Connections in Asynchronous transfer mode are called _____.

A. Virtual channels Page 67
B. Virtual Path Identifier
C. Cells
D. Cell tax

Question No:66 (Marks:1) Vu-Topper RM
A _____ is a device that combines multiple signals and forwards into a single line.

A. Modem
B. Multiplexer Page 41
C. Repeater
D. Layer 3 Switch

For More Help Vu Topper RM Contact What's app 0322-4021365

Question No:67 (Marks:1) Vu-Topper RM

_____ is inflexible.

A. Routing
B. Searching
C. Processing
D. Static routing Page 62

Question No:68 (Marks:1) Vu-Topper RM

If a hub is used to connect many computers in a LAN, then only _____ computers can communicate at a given time.

A. Three
B. Two Page 54
C. Four
D. One

Question No:69 (Marks:1) Vu-Topper RM

_____ is the term used for variance in transmission delays.

A. Friction
B. Segment
C. Checksum
D. Jitter Page 66

Question No:70 (Marks:1) Vu-Topper RM

_____ is also called self healing network.

A. ATM
B. FDDI
C. Token Ring
D. Frame relay Page 46

Question No:71 (Marks:1) Vu-Topper RM

_____ and _____ are the two frame types.

A. Internal and external
B. Single and dual
C. Implicit and explicit
D. Multicast and broadcast Page 35

For More Help Vu Topper RM Contact What's app 0322-4021365

Question No:72 **(Marks:1)** **Vu-Topper RM**

Bluetooth uses shared medium and _____ instead of coaxial cable.

A. **Radio waves** **Page 29**
B. Infrared waves
C. Micro waves
D. Low frequency waves

Question No:73 **(Marks:1)** **Vu-Topper RM**

A. Which of the following is not a guided medium?
B. Twisted pair cable
C. Fiber-optic cable
D. **Atmosphere** **Google**
E. Coaxial cable

Question No:74 **(Marks:1)** **Vu-Topper RM**

As a result of ARPA research, the first network was established which was named as _____.

A. INTERNETWORKING
B. ARPNET
C. **ARPANET** **Page 9**
D. PACKET NETWORK

Question No:75 **(Marks:1)** **Vu-Topper RM**

Asynchronous transfer mode (ATM) can dynamically establish a____.

A. **Switched virtual circuit** **Page 70**
B. Virtual connection identifier
C. Virtual path indicator
D. None of the given options

Question No:76 **(Marks:1)** **Vu-Topper RM**

A typical port on an ATM switch operates at _____ or _____ higher.

A. OC-2 speed (155Gbps)
B. OC-2 speed (1000Mbps)
C. **OC-3 speed (155Mbps)** **Page 72**
D. OC-3 speed (100Gbps)

For More Help Vu Topper RM Contact What's app 0322-4021365

Question No:77 **(Marks:1)** **Vu-Topper RM**

10Base-T Ethernet is often called a _____.

A. ring shaped star
B. ring shaped bus
C. star shaped bus **Page 46**
D. star shaped ring

Question No:78 **(Marks:1)** **Vu-Topper RM**

_____ allows automatic updates.

A. Dynamic routing **Page 62**
B. Static routing
C. Routing
D. Default routing

Question No:79 **(Marks:1)** **Vu-Topper RM**

Handling variable length packets leads to memory _____.

A. Fragmentation **Page 72**
B. Management
C. Location
D. Allocation

Question No:80 **(Marks:1)** **Vu-Topper RM**

In order to forward a copy of frame, the bridge uses _____ address.

A. Network
B. Destination **Page 51**
C. IP
D. Source

Question No:81 **(Marks:1)** **Vu-Topper RM**

We may use _____ to extend local area network.

A. Bridge, Router
B. Bridge, Hub, Router
C. Bridge, Hub, Repeater **Page 149**
D. Bridge, Hub, Repeater, Router

For More Help Vu Topper RM Contact What's app 0322-4021365

Question No:82 **(Marks:1)** **Vu-Topper RM**

All of the given options are the types of delay except _____.

A. Propagation
B. Access
C. Throughput **Page 79**
D. Queuing

Question No:83 **(Marks:1)** **Vu-Topper RM**

While computing shortest path in a graph, next hop information is inserted into _____.

A. Routing table **Page 62**
B. Trailer
C. Header
D. Register

Question No:84 **(Marks:1)** **Vu-Topper RM**

LAN interface uses _____ to copy frame data directly from main memory

A. DMA **Page 34**
B. FDDI
C. Hard disk
D. Flash

Question No:85 **(Marks:1)** **Vu-Topper RM**

The Gigabit Ethernet hardware operates at a rate of _____.

A. 10 Mbps
B. 100 Mbps
C. 1000 Mbps **Page 263**
D. 1000 Gbps

Question No:86 **(Marks:1)** **Vu-Topper RM**

In the early resource sharing era, which resources were shared among users?

A. Computation **Page 9**
B. Floppy Drives
C. Hard Disk
D. Printers

For More Help Vu Topper RM Contact What's app 0322-4021365

Question No:87 **(Marks:1)** **Vu-Topper RM**

If two buildings are located far from each other then bridge, and ___ can be used to connect two LAN.

A. **Optical fiber** **Page 51**
B. Ethernet modem
C. Switch
D. NIC

Question No:88 **(Marks:1)** **Vu-Topper RM**

Which type of network consists of wireless connection of laptops in a university classroom?

A. WAN
B. MAN
C. Fog
D. **LAN** **Google**

Question No:89 **(Marks:1)** **Vu-Topper RM**

A typical bridge has _____.

A. One NIC, a CPU a memory and a ROM.
B. **Two NICs, a CPU a memory and a ROM.** **Page 50**
C. RAM, ROM and CPU.
D. A cache memory, ROM and CPU.

Question No:90 **(Marks:1)** **Vu-Topper RM**

_____ is used for compressed audio and video, where the data rate depends on the level of compression that can be achieved.

A. Constant Bit Rate
B. Stable Bit Rate
C. **Variable Bit Rate** **Page 71**
D. Available Bit Rate

Question No:91 **(Marks:1)** **Vu-Topper RM**

There are _____ types of data stuffing.

A. 1
B. **2** **Page 17**
C. 0
D. 5

For More Help Vu Topper RM Contact What's app 0322-4021365

Question No:92 (Marks:1) Vu-Topper RM
Dijkstra's algorithm can accommodate weights on _____ in graph.

A. **Nodes Page 62**
B. Edges
C. Path
D. Connections

Question No:93 (Marks:1) Vu-Topper RM
_____ masks your IP address.

A. Firewall
B. Antivirus
C. **VPN Conceptual**
D. Incognito mode

Question No:94 (Marks:1) Vu-Topper RM
Static routing computes routing table information at _____ time.

A. Load
B. **Boot Page 62**
C. Execute
D. One

Question No:95 (Marks:1) Vu-Topper RM
_____ was the first automated tool required to see whether the given computer is online or not.

A. Probing program
B. PING program
C. status program
D. **None Page 11**

Question No:96 (Marks:1) Vu-Topper RM
In which type of error detection, the arithmetic sum is calculated before and after the transmission of data at both communication ends?

A. CRC
B. Party
C. **Checksum Page 19**
D. Hash Function

For More Help Vu Topper RM Contact What's app 0322-4021365

Question No:97 **(Marks:1)** **Vu-Topper RM**
Computer sends a connection request to the _____ to which it is attached while establishing a switched virtual circuit

A. Bridge
B. Switch **Page 70**
C. VPI
D. Virtual circuit

Question No:98 **(Marks:1)** **Vu-Topper RM**
The bridges communicate with each other on the network and use _____ algorithm to decide which bridge will not forward frames if a cycle occurs.

A. Djikstra
B. Shortest path first
C. Vector distance
D. Distributed Spanning Tree **Page 53**

Question No:99 **(Marks:1)** **Vu-Topper RM**
Ethernet uses a _____ bit static addressing scheme in which each device is assigned a unique address by the manufacturer.

A. 64
B. 48 **Page 109**
C. 32
D. 16

Question No:100 **(Marks:1)** **Vu-Topper RM**
Weights on graph edges reflect cost of _____.

A. Nodes
B. Traversing edge **Page 63**
C. Trending edge
D. Path

Question No:101 **(Marks:1)** **Vu-Topper RM**
A _____ relies on the hardware manufacturer to assign a unique physical address to each network interface.

A. Static addressing scheme **Page 34**
B. Configurable addressing scheme
C. Dynamic addressing scheme

For More Help Vu Topper RM Contact What's app 0322-4021365

D. None of the given

Question No:102 (Marks:1) Vu-Topper RM
In _____ topology, if the switch goes down all the computers will be disconnected.

A. Star Google
B. Ring
C. Bus
D. Mesh

Question No:103 (Marks:1) Vu-Topper RM
Which type of network consists of wired computers in a university classroom?

A. MAN
B. PAN
C. WAN
D. LAN Google

Question No:104 (Marks:1) Vu-Topper RM
If you as a network administrator want to know the traffic flow of your data while communicating with a remote computer which of the following will be used to know about intermediate routers?

A. Ipconfig
B. Ping Page 11
C. Traceroute
D. Arp

Question No:105 (Marks:1) Vu-Topper RM
Hardware address is also called _____.

A. Physical address Google
B. Logical address
C. IP address
D. Port address

Question No:106 (Marks:1) Vu-Topper RM
Thick Ethernet also requires _____ to avoid signal reflectance.

A. Transceivers
B. AUI cable

For More Help Vu Topper RM Contact What's app 0322-4021365

C. Drop cable
D. Terminators **Page 41**

Question No:107 **(Marks:1)** **Vu-Topper RM**
Which of the following network is using the TCP/IP model globally?
A. PAN
B. SAN
C. LAN
D. The Internet **Google**

Question No:108 **(Marks:1)** **Vu-Topper RM**
VPNs connections are sometimes called _____.
A. Tunnels **Page 75**
B. Open networking
C. Routing
D. Public network

Question No:109 **(Marks:1)** **Vu-Topper RM**
To reduce _____ computers can be connected and distributed to a number of hubs, then the hubs can be connected to a switch.
A. Costs **Page 54**
B. Quality
C. Efficiency
D. Noise

Question No:110 **(Marks:1)** **Vu-Topper RM**
If a _____ is used the communication between two computers will not affect the other pair of computers and they can communicate at the same time
A. Hub
B. Switch **Page 54**
C. Repeater
D. Amplifier

Question No:111 **(Marks:1)** **Vu-Topper RM**
The length of hardware address is _____.
A. One to ten bytes
B. One to five bytes

For More Help Vu Topper RM Contact What's app 0322-4021365

C. **One to six bytes** **Page 34**
D. One to seven bytes

Question No:112 **(Marks:1)** **Vu-Topper RM**
A network analyzer is also called _____.
A. Network manager
B. Network administrator
C. **Network monitor** **Page 37**
D. Network

Question No:113 **(Marks:1)** **Vu-Topper RM**
No any error detection scheme is perfect becausetransmission errors can affect _____.
A. Data
B. Additional Information
C. **Additional information & data** **Google**
D. Transmission medium

Question No:114 **(Marks:1)** **Vu-Topper RM**
The token ring network topology is a ring but wiring topology is a ___.
A. **Star** **Page 44**
B. bus
C. tree
D. mesh

Question No:115 **(Marks:1)** **Vu-Topper RM**
_____ addresses are used in an ethernet frame.
A. **IP** **Page 99**
B. Port
C. Logical
D. MAC

Question No:116 **(Marks:1)** **Vu-Topper RM**
AUI cable connects from NIC to _____.
A. BNC Connector
B. RJ-45 Connector
C. **Transceiver** **Page 41**
D. Terminator

For More Help Vu Topper RM Contact What's app 0322-4021365

Question No:117 (Marks:1) Vu-Topper RM

Public networks are _____.

A. More secure than LAN
B. Flexible Page 74
C. Limited in boundary
D. Intranet

Question No:118 (Marks:1) Vu-Topper RM

The maximum cable length of a LAN is fixed because _____.

A. Additional hardware are not suitable for the LAN extension.
B. The electrical signal level gets weaker as it travels. Page 48
C. Additional software are not suitable for the LAN extension
D. The electrical signal level gets stronger as it travels.

Question No:119 (Marks:1) Vu-Topper RM

In _____network topology is separated from route computation.

A. Local area
B. Link-state routing Page 64
C. Static routing
D. Dynamic routing

Question No:120 (Marks:1) Vu-Topper RM

Which layer of the OSI Model directly communicates and controls the transmission medium:

A. Transmission
B. Physical Google
C. Application
D. Network

Question No:121 (Marks:1) Vu-Topper RM

In _____ technique data is treated as a sequence of integers and their arithmetic sum is computed and the carry bits are added to the final sum.

A. CRC
B. Bit stuffing
C. Checksum Page 19
D. 2D Parity

For More Help Vu Topper RM Contact What's app 0322-4021365

Question No:122 **(Marks:1)** **Vu-Topper RM**
A network with _____ jitter takes more time to deliver some packets than others.

A. Zero
B. High **Page 80**
C. Low
D. Moderate

Question No:123 **(Marks:1)** **Vu-Topper RM**
A network uses _____ to arrange computers in a single closed loop.

A. Star Topology
B. Mesh Topology
C. Ring Topology **Page 25**
D. Bus Topology

Question No:124 **(Marks:1)** **Vu-Topper RM**
Which of the following tasks is not done by the second layer of the OSI model?

A. Flow control
B. Framing
C. Channel coding **Google**
D. Error control

Question No:125 **(Marks:1)** **Vu-Topper RM**
ATM is a single technology designed to meet the goals of both _____and _____.

A. LAN & PAN
B. LAN & WAN **Page 66**
C. LAN & MAN
D. MAN & WAN

Question No:126 **(Marks:1)** **Vu-Topper RM**
LAN and WAN are classified according to their _____.

A. Size **Page 4**
B. Connectivity
C. Medium
D. Mobility

For More Help Vu Topper RM Contact What's app 0322-4021365

Question No:127 (Marks:1) Vu-Topper RM

The identifier that is used for data transfer in the virtual circuit network is called _____.

A. **Virtual circuit identifier** **Google**
B. Global address
C. Network identifier
D. IP identifier

Question No:128 (Marks:1) Vu-Topper RM

In Direct point to point communication adding the Nth computer requires_____ new connections

A. N^2
B. N-1
C. **(N^2 -N)/2** **Page 23**
D. N (N-1)

Question No:129 (Marks:1) Vu-Topper RM

Which of the following is the correct function of bridge?

A. MTU path discovery
B. Byte stuffing
C. Routing information
D. **Filtering and forwarding a frame** **Page 50**

Question No:130 (Marks:1) Vu-Topper RM

Point to point topology is----------

A. Size based
B. Mobility based
C. **Connectivity based** **Page 5**
D. Medium based

Question No:131 (Marks:1) Vu-Topper RM

IEEE LLC / SNAP header is __which is used to specify the type of date.

A. **8 octets** **Google**
B. 16 octets
C. 32 octets
D. 64octets

For More Help Vu Topper RM Contact What's app 0322-4021365

Question No:132 **(Marks:1)** **Vu-Topper RM**
IEEE LLC / SNAP header is _____which is used to specify the type of date.

A. CRC
B. Bit stuffing
C. Checksum **Google**
D. 2D Parity

Question No:133 **(Marks:1)** **Vu-Topper RM**
What is the largest network in existence?

A. The internet **Google**
B. A PAN
C. A Fog
D. Edge Network

Question No:134 **(Marks:1)** **Vu-Topper RM**
The frame format of any LAN technology must consist of ____ and___-

A. Payload and CRC
B. Frame header and CRC
C. Payload and Frame type
D. Frame header and payload **Page 36**

Question No:135 **(Marks:1)** **Vu-Topper RM**
_____ can occur in LANs when a packet is delayed because the network is busy.

A. Jitter **Page 66**
B. Loop
C. Deadlock
D. Variance

Question No:136 **(Marks:1)** **Vu-Topper RM**
Which of the following cannot be used to extend a LAN?

A. Repeaters
B. Switches
C. Routers
D. Fiber modems **Google**

For More Help Vu Topper RM Contact What's app 0322-4021365

Question No:137 (Marks:1) Vu-Topper RM

Links-state algorithm is used in _____

A. RIP
B. IGRP
C. RIPv2
D. OSPF Page 64

Question No:138 (Marks:1) Vu-Topper RM

According to size, there are ___classifications of networks

A. 2 Page 2
B. 3
C. 4
D. 5

Question No:139 (Marks:1) Vu-Topper RM

In which topology terminators are used at the end of the cable?

A. Star
B. Bus Google
C. Ring
D. Mesh

Question No:140 (Marks:1) Vu-Topper RM

Switch simulates a _____LAN connecting segments

A. Single
B. Single shared
C. Bridged Page 54
D. Complex

Question No:141 (Marks:1) Vu-Topper RM

PVS stands for _____

A. Permanent virtual circuit Page 69
B. Private virtual circuit
C. Public virtual circuit
D. Plastic virtual circuit

For More Help Vu Topper RM Contact What's app 0322-4021365

Question No:142 (Marks:1) Vu-Topper RM

Hardware that calculates a CRC used two simple components _____

A. AND unit and XOR Unit
B. Shift register and XOR unit Page 20
C. Shift register & AND unit
D. Shift register and Shift XCR unit

Question No:143 (Marks:1) Vu-Topper RM

Thin ethernet is known as _____

A. 10 base 2 Google
B. 10 base 5
C. 10 base T
D. All

Question No:144 (Marks:1) Vu-Topper RM

If a sender with a 1 Gigabit NIC and receiver with 100 Megabit NIC wants to communicate with each other than at which speed they can communicate

A. 11 Megabit
B. 100 Megabit Google
C. 1 Gigabit
D. Gigabit

Question No:145 (Marks:1) Vu-Topper RM

_____ is used as an alternative of packet for a specific computer network technology

A. Datum
B. Token
C. Ether
D. Frame Page 14

Question No:146 (Marks:1) Vu-Topper RM

The sharing of a medium and its link by two or more devices is called _

A. Modulation
B. Encoding
C. Multiplexing Google
D. Line discipline

For More Help Vu Topper RM Contact What's app 0322-4021365

Question No:147 (Marks:1) Vu-Topper RM

The topology each computer is connected to a central hub is called

A. Ring topology
B. Star topology Page 5
C. Tree topology
D. Mesh topology

Question No:148 (Marks:1) Vu-Topper RM

Asynchronous transfer mode (ATM) is designed to work on fiber but can be used with _____

A. Wireless
B. Twisted pair Page 72
C. Wifi
D. Bluetooth

Question No:149 (Marks:1) Vu-Topper RM

The basic responsibility of NIC is _____

A. To access medium network Google
B. To resource allocation
C. To access memory
D. All of the given option

Question No:150 (Marks:1) Vu-Topper RM

Frame relay is ____

A. Connection oriented service Page 64
B. Connectionless service
C. Typically ranges for 5 Mbps to 1000Mbps
D. Call based

Question No:151 (Marks:1) Vu-Topper RM

The length of time required to send a variable length packet is ____

A. 5 second
B. Variable Page 72
C. Constant
D. Fix

For More Help Vu Topper RM Contact What's app 0322-4021365

Question No:152 (Marks:1) Vu-Topper RM
In Token Ring, if all computers are ready to transmit it enforces _Access

A. First come first served
B. Round Robin Page 30
C. Shorter delay
D. Last come first served

Question No:153 (Marks:1) Vu-Topper RM
The Ethernet standard specifies that frames are sent using the__ scheme.

A. Differential Manchester
B. Not Return to Zero (NR2)
C. Manchester Encoding Page 27
D. Return to Zero (RZ)

Question No:154 (Marks:1) Vu-Topper RM
ATM uses the concept of _____.

A. Connection-oriented Page 66
B. Connection-less
C. Variable packet size
D. Fixed and variable packet size

Question No:155 (Marks:1) Vu-Topper RM
Which of the following is a benefit of point to point communication?

A. Quick to configure
B. Security implementation Google
C. Cost
D. Less availability

Question No:156 (Marks:1) Vu-Topper RM
_____ is not used to extend LAN.

A. Hub
B. Fiber modem Google
C. Repeater
D. Bridge

For More Help Vu Topper RM Contact What's app 0322-4021365

Question No:157 (Marks:1) Vu-Topper RM
Which types of VPNs are used for corporate connectivity across companies residing in different geographical locations?

A. Remote access VPNs
B. Peer-to-peer VPNs
C. Country-to-country VPNs
D. Site-to-site VPNs Google

Question No:158 (Marks:1) Vu-Topper RM
Star topology is the kind of

A. Tree topology
B. Point-to-point topology Page 5
C. Broadcast topology
D. Ring topology

Question No:159 (Marks:1) Vu-Topper RM
In a _____ state, a bridge allows simultaneous use of each segment.

A. Ready
B. Steady Page 51
C. Final
D. Startup

Question No:160 (Marks:1) Vu-Topper RM
The network occupies larger areas like cities & countries is called

A. LAN
B. WAN Google
C. MAN
D. All of the above

Question No:161 (Marks:1) Vu-Topper RM
In link state routing _____ send link-state information about local connections.

A. Bridge
B. Switches Page 64
C. Routers
D. Hubs

For More Help Vu Topper RM Contact What's app 0322-4021365

Question No:162 (Marks:1) Vu-Topper RM
Transmission media are usually categorized as _____.

A. **Guided or unguided** **Google**
B. Fixed or unfixed
C. Determinate or indeterminate
D. Metallic or non-metallic

Question No:163 (Marks:1) Vu-Topper RM
Even parity can be used to check for _____ bit/ bits of errors.

A. **Page 18**
B. 2
C. 3
D. 0

Question No:164 (Marks:1) Vu-Topper RM
Routing table entries can be _____ with a default route.

A. **Collapsed** **Page 60**
B. Redirected
C. Emerged
D. Guaranteed

Question No:165 (Marks:1) Vu-Topper RM
The system administrator must coordinate to avoid the conflict in_____ hardware addressing scheme.

A. Static
B. Dynamic
C. **Configurable** **Google**
D. Fixed

Question No:166 (Marks:1) Vu-Topper RM
_____ network does not depend on CSMA/CD.

A. **Ethernet** **Google**
B. Fast Ethernet
C. Gigabit Ethernet
D. Wireless

For More Help Vu Topper RM Contact What's app 0322-4021365

Question No:167 (Marks:1) Vu-Topper RM
Which of the following technologies can extend the diameter of LAN medium?

A. Fiber optic
B. Repeater
C. Diameter of LAN medium is not extendable
D. Fiber optic and Repeaters Google

Question No:168 (Marks:1) Vu-Topper RM
Connections are formed in Asynchronous transfer mode by starting values in_____ in ATM switches, as opposed to making actual electrical connections.

A. Heap
B. Stack
C. Virtual Circuit
D. Memory locations Page 67

Question No:169 (Marks:1) Vu-Topper RM
The _____ scheme must be reliable to prevent conflicts.

A. Static
B. Dynamic Page 34
C. Configurable
D. Fixed

Question No:170 (Marks:1) Vu-Topper RM
Metropolitan area network is used for _____.

A. City Page 55
B. Building
C. Country
D. Continent

Question No:171 (Marks:1) Vu-Topper RM
Which addressing can be only used in the local area networks?

A. IP Google
B. Physical
C. Port
D. Protocol

For More Help Vu Topper RM Contact What's app 0322-4021365

Question No:172 (Marks:1) Vu-Topper RM

The sharing of a _____ among the workers in an office is a goal of resource sharing.

A. Mouse
B. Printer Page 9
C. Keyboard
D. Motherboard

Question No:173 (Marks:1) Vu-Topper RM

ATM uses fixed size, small cells, 48 octet's data and _____.

A. Octets header
B. 5 Octets header Page 65
C. 6 Octets header
D. 7 Octets header

Question No:174 (Marks:1) Vu-Topper RM

Which of the followings is not an advantage of framing?

A. Missing not indicates sending computer crashed.
B. Missing soh indicates receiving computer missed beginning of message.
C. Delimiters do not contain any user data Page 16
D. Bad frame is discarded.

Question No:175 (Marks:1) Vu-Topper RM

The _____ field of Ethernet frame has the purpose of receiver synchronization.

A. Preamble Page 36
B. Frame Type
C. Data
D. CRC

Question No:176 (Marks:1) Vu-Topper RM

_____ was the first internet available for the first time.

A. ARPANAT
B. The ARPNET
C. The NET
D. ARPANET Page 9

For More Help Vu Topper RM Contact What's app 0322-4021365

Question No:177 (Marks:1) Vu-Topper RM

We need packets rather than bits because _____

A. To compress the data
B. Packets move faster
C. Sender and receiver need to coordinate to detect transmission errors. Page 14
D. Packets can only move between two terminals

Question No:178 (Marks:1) Vu-Topper RM

When an application _____ any data, it makes a copy of the data available to all other computers on the network.

A. Multicast Page 143
B. Broadcast
C. Anycast
D. Unicast

Question No:179 (Marks:1) Vu-Topper RM

Each computer in LAN is identified by a physical address, usually imprinted on the _____.

A. Network interface card (NIC) Google
B. Modem
C. Router
D. Switch

Question No:180 (Marks:1) Vu-Topper RM

-------is a hardware device also used to connect two LAN segments to extend a LAN. Unlike a repeater, a bridge uses two NICs to connect two segments.

A. A BRIDGES Page 50
B. FRAME FILTERING
C. REPEATERS
D. LAN EXTENSIONS

Question No:181 (Marks:1) Vu-Topper RM

The fiber-modem coverts digital data into _____ then transmits over the optical fiber.

A. Pulses of light Page 48
B. Kilometers

For More Help Vu Topper RM Contact What's app 0322-4021365

C. Bandwidth
D. Electrical signal

Question No:182 (Marks:1) Vu-Topper RM
The switch that has computers attached with it, is called _____switch.
A. Exterior Page 59
B. Interior
C. Packet
D. Front

Question No:183 (Marks:1) Vu-Topper RM
_____standard includes logical link control (LLC) sub network attachment point (SNAP) header.
A. IEEE 802.2 Page 37
B. IEEE 804.4
C. IEEE 806.2
D. IEEE 808.6

Question No:184 (Marks:1) Vu-Topper RM
Ethernet standard specifies that any two stations cannot be separated by more than _____ Repeaters.
A. Two
B. Four Page 49
C. Six
D. Eight

Question No:185 (Marks:1) Vu-Topper RM
The basic idea behind the operation of network analyzer is a computer with a network interface that receives all frames, which is called ____.
A. Land mode
B. Promiscuous mode Page 38
C. Filter specifications
D. Logical code

Question No:186 (Marks:1) Vu-Topper RM
_____is a method for computing routing table information.
A. Manual entry
B. Static routing Google
C. Boot time routing

For More Help Vu Topper RM Contact What's app 0322-4021365

D. None of the above

Question No:187 (Marks:1) Vu-Topper RM
ATM header is about _____ of the cell.
A. 5%
B. 10% Page 66
C. 15%
D. 20%

Question No:188 (Marks:1) Vu-Topper RM
To model a WAN, we use a graph in which the nodes model switches and the edges model direct connection between_____.
A. Switches Page 59
B. Interior
C. Packet
D. Front

Question No:189 (Marks:1) Vu-Topper RM
Most LANs that employ ring topology use an access mechanism known as-------
A. CSMA/CD
B. CSMA/CA
C. CSMA
D. TOKEN PASSING Google

Question No:190 (Marks:1) Vu-Topper RM
An ----------method, the network hardware designers specify how type information is included in the frame and the value use to identify various frame types.
A. Explicit frame type Google
B. Ideal frame type
C. Implicit frame type
D. None of the given

For More Help Vu Topper RM Contact What's app 0322-4021365

Question No:191 (Marks:1) Vu-Topper RM
Hardware that calculates a CRC uses two simple components.
A. AND unit and XOR unit
B. **Shift register and XOR unit Google**
C. Shift register & AND unit
D. Shift register and shift XOR unit

Question No:192 (Marks:1) Vu-Topper RM
In FDDI, in case of a station failure, remaining stations loop back and.
A. Reroute data through Page31

Question No:193 (Marks:1) Vu-Topper RM
_____ is a tool that sends a message to a remote computer and reports whether the computer responds.
A. Ping Google

Question No:194 (Marks:1) Vu-Topper RM
The Fast Ethernet hardware operates at a rate of _____.
A. 100Mbps Page27

Question No:195 (Marks:1) Vu-Topper RM
In a ping command result, time denotes the _____.
A. RTT Google
B. TRL
C. TTL

Question No:196 (Marks:1) Vu-Topper RM
The number of connections needed for 8 computers in direct point to point communication is equal to_____.
A. 28 Google
B. 20
C. 14

Question No:197 (Marks:1) Vu-Topper RM
If a computer on the network shares resources for others to use, it is called ____
A. Server Google
B. Client

For More Help Vu Topper RM Contact What's app 0322-4021365

C. Mainframe

Question No:198 (Marks:1) Vu-Topper RM
ISO stands for
A. International Standard Organization Google
B. International Student Organization
C. Integrated Services Organization

Question No:199 (Marks:1) Vu-Topper RM
ISO OSI model is used in
A. Standalone PC
B. Network environment Google

Question No:200 (Marks:1) Vu-Topper RM
Network cable lies on _____ layer
A. Application
B. Network
C. Physical

Question No:201 (Marks:1) Vu-Topper RM
ISDN is an example of _____ network
A. Circuit switched
B. Packet switched

Question No:202 (Marks:1) Vu-Topper RM
X.25 is an example of _____ network
A. Circuit switched
B. Packet switched

Question No:203 (Marks:1) Vu-Topper RM
_____ allows LAN users to share computer programs and data.
Communication server
A. Print server
B. File server Google

For More Help Vu Topper RM Contact What's app 0322-4021365

Question No:204 (Marks:1) Vu-Topper RM
Print server uses _____ which is a buffer that holds data before it is send to the printer.
A. Queue
B. Spool
C. Node

Question No:205 (Marks:1) Vu-Topper RM
A standalone program that has been modified to work on a LAN by including concurrency controls such as file and record locking is an example of____
A. LAN intrinsic software
B. LAN aware software
C. Groupware
D. LAN ignorant software

Question No:206 (Marks:1) Vu-Topper RM
The _____ portion of LAN management software restricts access, records user activities and audit data etc.
A. Configuration management
B. Security management
C. Performance management

Question No:207 (Marks:1) Vu-Topper RM
What is the max cable length of STP?
A. 100 ft
B. 200 ft
C. 200 m

Question No:208 (Marks:1) Vu-Topper RM
What is the max data capacity of STP?
A. 10 mbps
B. 100 mbps
C. 1000 mbps
D. 10000 mbps

For More Help Vu Topper RM Contact What's app 0322-4021365

Question No:209 **(Marks:1)** **Vu-Topper RM**

What is the central device in star topology?

A. STP server

B. Hub/switch **Google**

C. PDC

D. Router

Question No:210 **(Marks:1)** **Vu-Topper RM**

PVC stands for _____.

PERMANENT VIRTUAL CIRCUITS **Page 69**

Question No:211 **(Marks:1)** **Vu-Topper RM**

The CSMA/CD mechanism does not work with _____.?

A. Long delays. **Page 49**

B. Less cable length.

C. High throughput.

D. Two Ethernet segments.

Question No:212 **(Marks:1)** **Vu-Topper RM**

_____ Networks are sometimes called Intranet.

A. LAN

B. Public

C. Virtual

D. Private **Page 73**

Question No:213 **(Marks:1)** **Vu-Topper RM**

Which one is a method for building routing tables?

A. Program

B. Manual entry **Page 62**

C. Graph algorithm

D. Store and forward

Question No:214 **(Marks:1)** **Vu-Topper RM**

Point-to-point topology is

A. Connectivity **Page 5**

For More Help Vu Topper RM Contact What's app 0322-4021365

Visit My YouTube Channel
For More Important Notes
Channel Name = #VuTopperRM

For More Help Vu Topper RM Contact What's app 0322-4021365

CS610- Computer Network
MIDTERM EXAMINATION
Spring 2010

Question No: 1 (M a r k s: 1)
No error detection scheme is perfect because transmission errors can affect the additional information as well as the data.

► **True** **(Computer Networks and Internets, page82)**
► False

Question No: 2 (M a r k s: 1)
------ Program sends a message to a remote computer and reports whether the computer responds.

► **Ping** **(Computer Networks and Internets, page9)**
► Traceroute
► ICMP
► Non of the given

Question No: 3 (M a r k s: 1)
---------- was especially concerned about the lack of high powered computers.

► **ARPA** **(Computer Networks and Internets, page5)**
► IEEE
► EIA
► Non of the given

Question No: 4 (M a r k s: 1)
The term -------- is used to denote the definition of a packet used with a specific type of network.
► Packet
► **Frame** **(Computer Networks and Internets, page 73)**
► Data
► None of the given

Muhammad Moaaz Siddiq MCS (3rd)
mc100401285@Gmail.com
Campus:- Institute of E-Learning & Modern Studies
(IEMS) Samundari

Question No: 5 (M a r k s: 1)
Computer networks are often called ---------- because they use packet technology.

► Ethernet
► Switch networks
► Packet networks **(Computer Networks and Internets, page 73)**
► None of the given

Question No: 6 (M a r k s: 1)
---------- have advantages arisen from the size and ease of computation.

► CRC
► Parity **(Page 19)**
► Checksums
► None of given

Question No: 7 (M a r k s: 1)
Most LANs that employ ring topology use an access mechanism known as-------

► CSMA/CD
► CSMA/CA
► TOKEN PASSING **(Computer Networks and Internets, page95)**
► None of the given

Question No: 8 (M a r k s: 1)
IEEE LLC/SNAP header is --------, which is used to specify the type of data.

► 8 octets **(Computer Networks and Internets, page112)**
► 8 bytes
► 8 bits
► None of the given

Question No: 9 (M a r k s: 1)
Formally named _____ informally known as the twisted pair Ethernet or TP Ethernet.

► 10 Base 2
► 10 Base 5
► 10 Base T **(Page 43)**
► None of the given

Muhammad Moaaz Siddiq MCS (3rd)
mc100401285@Gmail.com
Campus:- Institute of E-Learning & Modern Studies
(IEMS) Samundari

Question No: 10 (M a r k s: 1)
An interface for twisted pair Ethernet must have an _____ connector , and must generate signals according to the_____ specification.

► RJ-45, 10 Base T **(Computer Networks and Internets, page 126)**
► RJ-45, 10 Base 5
► BNC, 10 Base 2
► BNC, 10 Base T

Question No: 11 (M a r k s: 1)
A bridges function in the _____ layers(s).

► Physical (MAC) **Click here for Detail**
► Data link
► Network
► Physical (MAC) and Data link

Question No: 12 (M a r k s: 1)
A Bridge can _____

► Filter a frame
► Forward a frame
► Extend a LAN
► Do all the above **Click here for Detail**

Question No: 13 (M a r k s: 1)
A Bridge forwards or filters a frame by comparing the information in its address table to the frame's_____

► Layer 2 source address
► Source node's physical address
► Layer 2 destination address **Click here for Detail**
► Layer 3 destination address

Question No: 14 (M a r k s: 1)
_____ computes shortest paths in a graph by using weights on edges as a measure of distance.
► Greedy algorithm
► Distance vector algorithm
► Dijksta's algorithm **(Computer Networks and Internets, page112)**
► Non of the given

Muhammad Moaaz Siddiq MCS (3rd)
mc100401285@Gmail.com
Campus:- Institute of E-Learning & Modern Studies
(IEMS) Samundari

Question No: 15 (M a r k s: 1)
_____ is used for audio and video, since these have predefined maximum data rates

► **Constant Bit Rate (CBR) service** **(Page 71)**
► Variable Bit Rate (VBR) service
► Available Bit Rate (ABR) service
► None of the given

Question No: 16 (M a r k s: 1)
Unlike Frame Relay and ATM, SMDS (Switched multi-megabit Data service) offers_____ .

► **Connectionless service paradigm** **(Computer Networks and Internets, page112)**
► Connection oriented service paradigm
► Both Connectionless and Connection-oriented service paradigm
► None of the given

Question No: 17 (M a r k s: 1)
A network with throughput T and delay D has a total of _____ bit in transit at any time.

► T / D
► **T x D** **(Computer Networks and Internets, page203)**
► T + D
► None of the given

Question No: 18 (M a r k s: 1)
ATM is designed to work on_____.

► Twisted Pair
► Coaxial
► Radio Frequency
► **Fiber** **(Computer Networks and Internets, page 72)**

Question No: 19 (M a r k s: 1)
Computers attached to an Ethernet use ------ in which a computer waits for the ether to be idle before transmitting a frame.

► **CSMA/CD** **(Computer Networks and Internets, page 93)**
► CSMA/CA
► TOKEN PASSING
► None of the given

Muhammad Moaaz Siddiq MCS (3rd)
mc100401285@Gmail.com
Campus:- Institute of E-Learning & Modern Studies
(IEMS) Samundari

Question No: 20 (M a r k s: 1)
FDDI can transmits data at a rate of ----------

► **100 million bits per second** **(Page 314)**
► 10 million bits per second
► 1000 million bits per second
► None of the given

CS610- Computer Network
MIDTERM EXAMINATION
Spring 2010

Question No: 1 (M a r k s: 1)
In Point-to-Point topology there are two topologies.

► Star and Tree
► Tree and Ring
► Star and Ring
► **Star and Tree** **(Page 5)**
► None of the given

Question No: 2 (M a r k s: 1)
------ Program sends a message to a remote computer and reports whether the computer responds.

► **Ping** **(Computer Networks and Internets, page9)**
► Traceroute
► ICMP
► Non of the given

Question No: 3 (M a r k s: 1)
------ has no way to determine the cause of the problem.

► ICMP
► **Ping** **(Computer Networks and Internets, page 11)**
► Trace route
► Non of the given

Muhammad Moaaz Siddiq MCS (3rd)
mc100401285@Gmail.com
Campus:- Institute of E-Learning & Modern Studies
(IEMS) Samundari

Question No: 4 (M a r k s: 1)
The term----- ------- refers to the general concept of a small block of data

► Packet (Page 16)
► Frame
► Data
► None of the given

Question No: 5 (M a r k s: 1)
---------- scheme, which is designed to help detect transmissions errors, send one extra bit of information with each character

► Parity (Computer Networks and Internets, page 77)
► Checksums
► CRC
► None of given

Question No: 6 (M a r k s: 1)
Local Talk is a LAN technology that employs ----------

► Bus topology (Page 30)
► Ring topology
► Star topology
► None of the given

Question No: 7 (M a r k s: 1)
Most LANs that employ ring topology use an access mechanism known as-------

► CSMA/CD
► CSMA/CA
► TOKEN PASSING (Computer Networks and Internets, page95) rep
► None of the given

Question No: 8 (M a r k s: 1)
Ethernet uses a ------ bit static addressing scheme in which each device is assigned a unique address by the manufacturer.

► 64
► 48 (Computer Networks and Internets, page 109)
► 32
► 8

Muhammad Moaaz Siddiq MCS (3rd)
mc100401285@Gmail.com
Campus:- Institute of E-Learning & Modern Studies
(IEMS) Samundari

Question No: 9 (M a r k s: 1)
Formally named _____ informally known as the thick wire Ethernet or Thick net.

► 10 Base 2
► 10 Base 5 Computer Networks and Internets, page 120)
► 10 Base T
► None of the given

Question No: 10 (M a r k s: 1)
Formally named _____ informally known as the twisted pair Ethernet or TP Ethernet.

► 10 Base 2
► 10 Base 5
► 10 Base T (Page 43) rep
► None of the given

Question No: 11 (M a r k s: 1)
The maximum size of an Ethernet segment is_____

► 250 meters
► 500 meters (Page 27)
► 700 meters
► None of the given

Question No: 12 (M a r k s: 1)
A Bridge can _____

► Filter a frame
► Forward a frame
► Extend a LAN
► Do all the above rep Click here For Detail

Question No: 13 (M a r k s: 1)
_____ computes shortest paths in a graph by using weights on edges as a measure of distance.

► Greedy algorithm
► Distance vector algorithm
► Dijksta's algorithm (Computer Networks and Internets, page112) rep
► Non of the given

Muhammad Moaaz Siddiq MCS (3rd)
mc100401285@Gmail.com
Campus:- Institute of E-Learning & Modern Studies
(IEMS) Samundari

Question No: 14 (M a r k s: 1)
_____is used for compressed audio and video where the data rate depends on the level of compression that can be achieved.

► Constant Bit Rate (CBR) service
► Variable Bit Rate (VBR) service (Page 71)
► Available Bit Rate (ABR) service
► None of the given

Question No: 15 (M a r k s: 1)
Basic LAN technologies such as Ethernet, Token Ring, and FDDI use a _____.

► Connectionless service paradigm (Computer Networks and Internets, page112)
► Connection-oriented service paradigm
► Both Connectionless and Connection-oriented service paradigm
► None of the given

Question No: 16 (M a r k s: 1)
The product of delay and throughput measures the _____ of data that can be present on the network.

► Area
► Volume (Page 80)
► Length
► None of the given

Question No: 17 (M a r k s: 1)
A network with throughput T and delay D has a total of _____ bit in transit at any time.

► T / D
► T x D (Computer Networks and Internets, page203) rep
► T + D
► None of the given

Question No: 18 (M a r k s: 1)
One repeater _____, two repeaters _____ the maximum cable length limitation.

► doubles, triple (Page 49)
► square roots, cude roots
► and, triple
► doubles, cancel

Muhammad Moaaz Siddiq MCS (3rd)
mc100401285@Gmail.com
Campus:- Institute of E-Learning & Modern Studies
(IEMS) Samundari

Question No: 19 (M a r k s: 1)
A network uses a ------ if all computers attach to a central point

► Star Topology (Page 25)
► Ring Topology
► Bus Topology
► None of the given

Question No: 20 (M a r k s: 1)
Computers attached to an Ethernet use ------ in which a computer waits for the other to be idle before transmitting a frame.

► CSMA/CD (Computer Networks and Internets, page 93) rep
► CSMA/CA
► TOKEN PASSING
► None of the given

CS610- Computer Network
MIDTERM EXAMINATION
Fall 2008

Question No: 1 (Marks: 1) - Please choose one
A typical port on an ATM switch operates at _____ or higher.
► OC-2 speed (155Mbps)
► OC-3 speed (100Mbps)
► OC-3 speed (155Mbps) (Page 72)
► OC-3 speed (155Gbps)

Question No: 2 (Marks: 1) - Please choose one
The product of delay and throughput measures the _____ of data that can be present on the network.

► Area
► Volume (Page 80) rep
► Length
► None of the given

Question No: 3 (Marks: 1) - Please choose one
_____is used for compressed audio and video where the data rate depends on the level of compression that can be achieved.
► Constant Bit Rate (CBR) service
► Variable Bit Rate (VBR) service (Page 71) rep
► Available Bit Rate (ABR) service
► None of the given

Muhammad Moaaz Siddiq MCS (3rd)
mc100401285@Gmail.com
Campus:- Institute of E-Learning & Modern Studies
(IEMS) Samundari

Question No: 4 (Marks: 1) - Please choose one
Which of the following is a connecting device?
► Bridge
► Repeater
► Hub
► All the given **Click here for Detail**

Question No: 5 (Marks: 1) - Please choose one
A bridges function in the _____ layers(s).
► Physical (MAC) **rep** **Click here for Detail**
► Data link
► Network
► Physical (MAC) and Data link

Question No: 6 (Marks: 1) - Please choose one
IEEE LLC/SNAP header is --------, which is used to specify the type of data.
► 8 octets (Computer Networks and Internets, page112) rep
► 8 bytes
► 8 bits
► None of the given

Question No: 7 (Marks: 1) - Please choose one
The third field of the header consists of ------ bit Ethernet frame type.
► 48
► 32
► 16 (Computer Networks and Internets, page110)
► 8

Question No: 8 (Marks: 1) - Please choose one
An ----------method, the network hardware designers specify how type information is included in the frame and the value use to identify various frame types.
► Explicit frame type (Page 35)
► Ideal frame type
► Implicit frame type
► None of the given

Question No: 9 (Marks: 1) - Please choose one
Local Talk is a LAN technology that employs ----------

► Star topology
► Bus topology (Page 30) rep
► Ring topology
► None of the given

Muhammad Moaaz Siddiq MCS (3rd)
mc100401285@Gmail.com
Campus:- Institute of E-Learning & Modern Studies
(IEMS) Samundari

Question No: 10 (Marks: 1) - Please choose one
The Fast Ethernet hardware operates at a rate of --------
- ►10 Mbps
- **►100 Mbps (Page 27)**
- ►1000 Mbps
- ►None of the given

Question No: 11 (Marks: 1) - Please choose one
---------- scheme, which is designed to help detect transmissions errors, send one extra bit of information with each character
- **►Parity (Computer Networks and Internets, page 77) rep**
- ►Checksums
- ►CRC
- ►None of given

Question No: 12 (Marks: 1) - Please choose one
Computer networks are often called ---------- because they use packet technology.
- ►Ethernet
- ►Switch networks
- **►Packet networks (Computer Networks and Internets, page 73) rep**
- ►None of the given

Question No: 13 (Marks: 1) - Please choose one
------ Program sends a message to a remote computer and reports whether the computer responds.
- **►Ping (Computer Networks and Internets, page 9) rep**
- ►Traceroute
- ►ICMP
- ►Non of the given

Question No: 14 (Marks: 1) - Please choose one
In ---------, network occupies larger areas like cities & countries.
- ►LAN
- **►WAN (Page 4)**
- ►MAN
- ►None of the given

Question No: 15 (Marks: 1) - Please choose one
In ----------, network occupies the smaller area like a room a floor or a building

- **►LAN (Page 4)**
- ►WAN
- ►MAN
- ►None of the given

Muhammad Moaaz Siddiq MCS (3rd)
mc100401285@Gmail.com
Campus:- Institute of E-Learning & Modern Studies
(IEMS) Samundari

Question No: 16 (Marks: 1) - Please choose one
In Point-to-Point topology there are two topologies.
► Tree and Ring
► Star and Ring
► Star and Tree (Page 5)
► None of the given

CS610- Computer Network
MIDTERM EXAMINATION
Fall 2008

Question No: 1 (Marks: 1) - Please choose one
_____ has a jitter zero

► None of the given
► Virtual Private Network
► Isochronous Network
► Asynchronous Network (Page 66)

Question No: 2 (Marks: 1) - Please choose one
Unlike Frame Relay and ATM, SMDS (Switched multi-megabit Data service) offers_____ .

► Connectionless service paradigm (Computer Networks and Internets, page112)
► Connection oriented service paradigm
► Both Connectionless and Connection-oriented service paradigm
► None of the given

Question No: 3 (Marks: 1) - Please choose one
ATM assigns each VC a _____ identifier that is divided two parts to produce a hierarchy.

► 21-bit
► 22-bit
► 23-bit
► 24-bit (Page 67)

Muhammad Moaaz Siddiq MCS (3rd)
mc100401285@Gmail.com
Campus:- Institute of E-Learning & Modern Studies
(IEMS) Samundari

Question No: 4 (Marks: 1) - Please choose one
Most WAN systems include a mechanism that can be used to eliminate the common case of duplication routing is called_____

►Hierarchal address
►Default route **(Computer Networks and Internets, page172)**
►Shortest path
►None of the given

Question No: 5 (Marks: 1) - Please choose one
The next hop to which a packet is sent depends only on

►Packet's destination **(Computer Networks and Internets, page169)**
►Packet's original source
►Path the packet has taken
►Non of the given

Question No: 6 (Marks: 1) - Please choose one
An interface for twisted pair Ethernet must have an _____ connector , and must generate signals according to the_____ specification.

►RJ-45, 10 Base T **(Computer Networks and Internets, page 126) rep**
►RJ-45, 10 Base 5
►BNC, 10 Base 2
►BNC, 10 Base T

Question No: 7 (Marks: 1) - Please choose one
When an application---------- data, it makes a copy of the data available to all other computers on the network.

►Broadcasting **Click here for Detail**
►Multicasting
►Unicasting
►None of the given

Question No: 8 (Marks: 1) - Please choose one
A ---------- provide a mechanism that a customer can use to set a physical address.

►Static addressing scheme
►Configurable addressing scheme **(Page 34)**
►Dynamic addressing scheme
►None of the given

Muhammad Moaaz Siddiq MCS (3rd)
mc100401285@Gmail.com
Campus:- Institute of E-Learning & Modern Studies
(IEMS) Samundari

Question No: 9 (Marks: 1) - Please choose one
FDDI can transmits data at a rate of -----

►100 million bits per second (Page 314) rep
►100 million bits per second
►100 million bits per second
►None of the given

Question No: 10 (Marks: 1) - Please choose one
Computers attached to an ether use ------ in which a computer waits for the ether to be idle before transmitting a frame.

►CSMA/CD (Computer Networks and Internets, page 93) rep
►CSMA/CA
►TOKEN PASSING
►None of the given

Question No: 11 (Marks: 1) - Please choose one
---------- have advantages arisen from the size and ease of computation.

►CRC
►Parity (Page 19) rep
►Checksums
►None of given

Question No: 12 (Marks: 1) - Please choose one
The term -------- is used to denote the definition of a packet used with a specific type of network.

►Packet
►Frame (Computer Networks and Internets, page 73)
►Data
►None of the given

Question No: 13 (Marks: 1) - Please choose one
------ has no way to determine the cause of the problem.

► Ping (Computer Networks and Internets, page 11) rep
►Trace route
►ICMP
►Non of the given

Muhammad Moaaz Siddiq MCS (3rd)
mc100401285@Gmail.com
Campus:- Institute of E-Learning & Modern Studies
(IEMS) Samundari

Question No: 14 (Marks: 1) - Please choose one
------ Program sends a message to a remote computer and reports whether the computer responds.

► Ping (Computer Networks and Internets, page9) rep
► Traceroute
► ICMP
► Non of the given

Question No: 15 (Marks: 1) - Please choose one
In ----------, network occupies the smaller area like a room a floor or a building

► LAN (Page 4) rep
► WAN
► MAN
► None of the given

Question No: 16 (Marks: 1) - Please choose one
No error detection scheme is perfect because transmission errors can affect the additional information as well as the data.
► True (Computer Networks and Internets, page82)
► False

Helping Material

Cs610- Computer Networks By Hammad Khalid Khan
Computer Networks and Internets with Internet Applications, 4/e (With CD) By Comer

Muhammad Moaaz Siddiq MCS (3rd)
mc100401285@Gmail.com
Campus:- Institute of E-Learning & Modern Studies
(IEMS) Samundari

CS610 130+ Mcqs
Spring 2022 #Mid-Term
WITH PROVE ANSWER
ORANGE MONKEY TEAM

Important NOTE:-

Maybe toppers are successful in school or college carrier but backbenchers are successful in their life because toppers run according to books while backbenchers don't follow rules and regulation that is why backbenchers are successful. For life, there are no books and another reason why toppers can't succeed because they fear failure and don't try anything new. Backbenchers don't fear failure as they have faced the failure in their school or college carrier so that is the reason they try new things and at last gain success.

As Abdul Kalam nicely quoted, "The best brains of the nation may be found on the last benches of the classroom"

بسم الله الرحمن الرحيم

In the name of Allah the most gracious the most merciful

1. **When an application ____ any data, it makes a copy of the data available to all other computers on the network.**

   Multicast…..confirm

2. **There are _____ types of data stuffing**

   2….confirm

   There are two types of data stuffing
   - Byte Stuffing
   - Bit Stuffing

3. **Which of the following is a benefit of direct point to point communication?**

   Security implementation…..confirm

   TD: Which of the following is a benefit of point to point communication?

   - Quick to configure
   - Security implementation

4. **If you as a network administrator want to know the traffic flow of your data while communicating with a remote computer which of the following will be used to know about intermediate routers?**

   Ping…..confirm

31 If you as a network administrator want to know the traffic flow of your data while communicating with a remote computer which of the following will be used to know about intermediate routers?

- Ipconfig
- Ping page 11
- Traceroute

5. **Which of the following network is using the TCP/IP model globally?**

The internet….confirm

Which of the following network is using the TCP/IP model globally?

- PAN
- SAN
- LAN
- The internet

6. **In which type of error detection the arithmetic sum is calculated before and after the transmission of data at both communication ends?**

Checksum…..confrim

CHECKSUM

The second procedure used to detect errors is checksum. In this procedure data is treated as a sequence of integers and their arithmetic sum is computed and the carry bits are added to the final sum. Then checksum is calculated by transmission then it is sent along the data and the receiver and the same calculation is performed and then compared with the original checksum transmitted. In this way errors are detected if the received checksum is different from the sent.
The figure illustrates the example.

7. **Hardware address is also called _____.**

Physical address……confirm

hardware address is also called _____

- Physical address
- Logical address

8. **The sharing of a _____ among the workers in an office is a goal of resource sharing**

   Printer….confirm

9. **Thick Ethernet also requires _____ to avoid signal reflectance**

   Terminators…confirm

10. **The _____ Field of Ethernet frame has the purpose of frame payload.**

    Data….confirm

FIELD	PURPOSE
Preamble	Allows receiver to synchronize
Destination address	Identifies intended recipient
Source Address	Hardware address of sender
Ether Type	Type of data carried in frame
Data	Payload
CRC	32-bit CRC code

11. In _____ each station is allocated time slot during which it can send data. Each station transmits its data in its assigned time slot.

TDMA…confirm

12. In_____ all computers are attached to a central hub

Star topology…..confirm

STAR TOPOLOGY

13. In which topology terminators are used at the end of the cable?

Bus….confirm

14. A network uses _____ to arrange computers in a single closed loop.

Ring topology…confirm

15. LAN interface uses _____ to copy frame data directly from main memory

DMA….confirm

16. **In direct point to point communication adding the NTH computer requires _____ new connections**

N-1….confirm

17. **_____ uses counter rotating rings in which data flows in opposite directions**

FDDI….confirm

18. **We need pockets rather than bits because _____.**

Sender and receiver need to coordinate to detect transmission errors.

19. **The gigabit Ethernet hardware operates at a rate of _____.**

1000 Mbps…..confirm

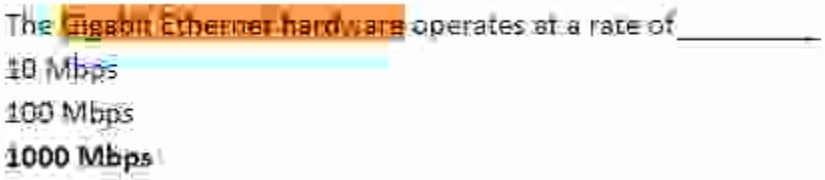

20. **Each computer in LAN is identified by a Physical address usually imprinted on the _____.**

Network interface card…..confirm

37. Each computer on LAN is identified by a physical address, usually imprinted on the ----------

a. Modem
b. Router
c. Switch
d. Network interface card

21. _____ network does not depend on CSMA/CD.

Ethernet….confirm

_____ Network (Raise For Success) does not depend on CSMA/CD

- Ethernet Correct
- Fast Ethernet
- Gigabit Ethernet
- Wireless

22. LAN interface hardware obeys _____ access rule.

CSMA/CD….confirm

- [illegible]
- [illegible]
- [illegible]

23. Point-to-point topology is

Connectivity based….confirm

24. Parity check is usually used to detect _____ bit error(s).

1….confirm

To detect the error there are different schemes in which parity checking is also only used. In parity checking, parity refers to the number of bits set to 1 in the data

25. _____ is a tool that sends a message to a remote computer and reports whether the computer responsibility

Ping…confirm

—— Program sends a message to a remote computer and reports whether the computer responds.

Ping

Ping

Traceroute

ICMP

26. LAN and WAN are classified according to their _____.

Size….confirm

27. LAN and WAN are classified according to their

- Size✓
- Connectivity
- Medium
- Mobility

27. In a ping command result, time denotes the _____.

RTT….confirm

43.In a ping command result, time denotes the ----------

a. TLT
b. TTL
c. BRT
d. RTT

28. How many computers are mandatory to form a network?

2

The correct answer is 2. A computer network is an interconnection among **two or more** computers or computing devices. Such interconnection allows computers to share data and

29. In __ technique data is treated as a sequence of integers and their arithmetic sum is computed and the carry bits are added to the final sum

Checksum….confirm

CHECKSUM

The second procedure used to detect errors is checksum. In this procedure data is treated as a sequence of numbers and their arithmetic sum is computed and the carry bits are added to the least sum. Then checksum is calculated by transmission then it is sent

30. In taken ring, if all computers are ready to transmit it enforces _____ access.

Round-robin access…..confirm

If all computers are ready to transmit it enforces Round-Robin access

31. Fixed network is a type of networks which is classified with respect to the _____ factor.

Mobility….confirm

The networks are also classified according to their mobility

In this respect there are two types of networks

- Fixed networks
- Mobile networks

32. _____ are two standard implementations to improve computational efficiency

Hashing and direct indexing…confirm

There are two standard implementations to improve computational efficiency

- Hashing
- Direct indexing

33. In the IP address _____ identifies an individual computer on the network.

Suffix….confirm

SUFFIX:

It identifies an individual computer on the network

34. In the IP address _____ identifies the physical network to which the computers are attached.

Prefix….confirm

PREFIX:

It identifies the physical network to which the computers are attached.

35. _____ Serve same purpose in internet as frames on LAN.

Packets…..confirm

These packets [illegible] purpose in Internet as frames on LAN.

36. IP datagram can contains ___ octets.

1-65.535…confirm

[illegible] octet and 65.535 octets [illegible]

37. TCP/IP defines the term ____ to refer any computer system that connects to a network and runs applications for users.

Host computer….confirm

TCP/IP defines the term host computer to refer to any computer system that connects to an Internet and runs applications. A TCP/IP protocol makes it possible for

38. _____protocols of TCP/IP layering model specify how to organize data into frame and how a computer transmits frames over a network.

Network interface layer….confirm

2 _ protocols of TCP/IP layering model specify how to organize data into frame and how a computer transmits frames over a network.

a) Session

b) Network interface layer

c) Internet Layer

d) Transport Layer

39. _____ of TCP/IP protocol suit specifies the format of packets sent across internet as well as the mechanisms used to forward packets.

Internet….confirm

12 _of TCP/IP Protocol Suit specifies the format of packets send across Internet as well as the mechanisms used to forward packets.

a) Physical Layer

b) Data Link Layer

c) Internet Layer

d) Transport Layer

40. As the internet grew the original Glassful addressing scheme became a limitation. The IP address space was being exhausted because all networks had to choose one of _____ possible sizes.

Three….confirm

As the internet grew the original Classful addressing scheme became a limitation. The IP address space was being exhausted because all networks had to choose one of three possible sizes. Many addresses were unused

41. Dotted decimal notation is a syntactic form the IP software uses to express _____ binary values when interacting with humans.

32-bit….confirm

Dotted decimal notation is a syntactic form the IP software uses to express 32-bit binary values when interacting with humans. Dotted decimal represents each octet in

42. Header contains all information needed to deliver datagram to the destination computer. But which one of the following is not included.

Rectfer…..confirm

Header contains all information needed to deliver datagram to the destination computer. It contains:

- Destination address
- Source address
- Identifier
- Other delivery information

43. For _____ information about forwarding is stored in a routing table which is initialized at system initialization and must be updated as network topology changes.

Efficiency…..confirm

For efficiency, information about forwarding is stored in a routing table, which is initialized at system initialization and must be updated as network topology changes

44. MTU stands for _____.

Maximum transmission Unit…..confirm

Maximum Transmission Unit (MTU)

45. In closed-form computation the protocol address assigned to a computer is chosen carefully so that computer's hardware address can be computed from the protocol address using basic Boolean and _____ operations.

Arithemetic….confirm

In Closed-form computation, the protocol address assigned to a computer is chosen carefully so that computer's hardware address can be computed from the protocol address using basic Boolean and arithmetic operations.

46. Internet Protocol (IP) address version 4 is comprised of _____ bits.

32…confirm

8. Internet protocol (IP) address version 4 is comprised of bits.
a) 48
b) 32
c) 24
d) 128

47. The current version of IP-Version 4 is _____ old.

20….confirm

The current version of IP- Version 4 (IPV4) is 20 years old.

48. _____ contains all information needed to deliver datagram to the destination.

Header…confirm

Header contains all information needed to deliver datagram to the destination computer. It contains:

49. Address resolution protocol is mostly used to bind a 32-bit IP address to a _____ Ethernet address.

48….confirm

protocol and hardware addresses. ARP is almost always used to bind a 32-bit IP address to a 48-bit Ethernet address.

50. The protocol address of the most hop must be _____ to an equivalent hardware before a packet can be sent.

Translated….confrim

hardware does not know how to locate a computer from a protocol address. The protocol address of the next hop must be translated to an equivalent hardware address before a packet can be sent.

51. HEADER LEN field gives size of extension header.

True….confirm

HEADER LEN field gives size of extension header.

52. Class A mask is 255.0.0.0 which is used for _____.

Subnetting….confirm

Class A mask is 255.0.0.0 which is used for subnetting.

53. IPV6 address consists of _____.

128 bits….confirm

IPV6 addresses are 128 bits.

54. The header format of IPV6 is entirely different.

True….confirm

IPV6 addresses are 128 bits.
Header format is entirely different.

55. HLEN shows the header length in units of _____ bits.

32 bits…confirm

HLEN shows the header length in units of 32-bits

56. VERS shows the version of _____.

IP…..confirm

VERS shows the version of IP

57. TOTAL LENGTH shows total octets in _____.

Datagram…confirm

TOTAL LENGTH shows total octets in datagram.

58. A datagram cannot be larger than _____ of a network over which it is sent.

MTU…confirm

A datagram cannot be larger than _____ of a network over which it is sent.

Select correct option

MTU

Size

59. Every hardware technology specification includes the definition of the maximum size of the frame data area which is called the _____ transmission Unit.

Maximum…..confirm

Every hardware technology specification includes the definition of the maximum size of the frame data area, which is called the Maximum Transmission Unit (MTU). Any

60. The IP class scheme does not divide the _____ address space into equal size class and the classes do not contain the same number of networks.

32-bit….confirm

The IP class scheme does not divide the 32-bit address space into equal size class and the classes do not contain the same number of networks.

61. _____shows senders preference for low latency high reliability.

Service type….confrim

SERVICE TYPE shows sender's preference for low latency, high reliability.

62. NEXT HEADER field in the base header defines type of header if appears at the end of fixed-size base header.

True…..confirm

Base header is fixed size (i.e. 40 octets. NEXT HEADER field in the base header defines type of header and it appears at end of fixed-size base header. Some extension

63. _____ uses counter rotating rings in which data flows in opposite directions.

FDDI….confirm

FDDI uses counter rotating rings in which data flows in opposite directions.

64. In _____ all computers are attached to a central hub.

Star topology….confirm

STAR TOPOLOGY:

In this topology, all computers are attached to a central point.

65. In a ___ all computers are attached to a single cable and any computer can send data to any other computer.

Bus topology….confirm

In a bus topology all computers are attached to a single long cable and any computer can send data to any other computer

66. _____ is standard wireless LAN that uses radio signals at 2.4GHz.

IEEE 802.11…..confirm

IEEE 802.11 is standard wireless LAN that uses radio signals at 2.4GHz.

67. Star topology is the kind of _____.

Point to point topology…..confirm

In Point-to-Point topology there are two topologies:

1) STAR topology
2) TREE topology

68. Tree topology is the kind of _.

Point to point topology….confirm

In Point-to-Point topology there are two topologies

1) STAR topology
2) TREE topology

69. In FDDI, in case of a station failure, remaining stations loop back and _____.

Re-route data through spare ring…..confirm

In case of fiber a station failure, remaining stations loop back and reroute data through spare ring. In this way all stations automatically configure loop back by monitoring data

70. _____ are the two frame types

Multicast and broadcast….confrim

_____ and _____ are the two frame types

- Internal and external
- Single and dual
- Implicit and explicit
- **Multicast and broadcast** page 35

71. In ___ topology if the switch goes down all the computers will be disconnected.

Star….confirm

In _____ topology, if the switch goes down all the computers will be disconnected.

- **Star**
- Ring
- Bus
- Mesh

72. Which type of network consists of wireless connection of laptops in a university classroom?

LAN….confirm

Which type of network consists of wireless connection of laptops in a university classroom?

- WAN
- MAN
- Fog
- **LAN** google

73. The basic idea behind the operation of network analyzer is a computer with a network interface that receives all frames, which is called

Promiscuous mode…..confirm

The basic idea behind the operation of network analyzer is a computer with a network interface that receives all frames, which is called promiscuous mode.

74. WE need packets rather than bits because_____.

a sender and receiver need to coordinate to detect transmission errors…confirm

send individually. Why we need packets rather than bits? The answer to this question is because a sender and receiver need to coordinate to detect transmission errors. Also the

75. As a result of ARPA research, the first network was established which was named as _____.

ARPANET…..confirm

fulfill the purpose of resource sharing. As a result of ARPA research the first network was established which was named ARPANET.

76. While transmitting data from source destination B, 4 bits are changed during the transmission then the error is a _____.

Brust error….confirm

While transmitting data from source A to destination B, 4 bits are changed during the transmission then the error is a _____.

- Burst error page 22
- Single error
- Double error
- Logic error

77. Each computer in LAN is identified by a physical address, usually imprinted on the _____.

Network interface card….confirm

Each computer on LAN is identified by a physical address, usually imprinted on the----------

- Modem
- Router
- Switch
- Network interface card

78. Which type of network consists of wired computers in a university classroom?

LAN….confirm

)Which type of network consists of wired computers in a college classroom?

PAN

LAN

MAN

79. Bluetooth uses shared medium and _____ instead of coaxial cable.

Radio waves….confirm

Bluetooth specifies a wireless LAN for short distances. It uses shared medium and radio waves instead of coaxial cable.

80. The Ethernet standard specifies that frames are sent using the _____ scheme.

Manchester Encoding…..confirm

The Ethernet standard specifies that frames are sent using the ——
Select correct option:

Differential Manchester
Not Return to Zero (NRZ)
Manchester Encoding (Correct)
Return to Zero (RZ)

81. In _____ technique, all members of the network can send data on the specific time slot?

CSMA….confirm

In _____ technique, all members of the network can send data only on the specific time slot?

- CDMA
- FDMA
- CSMA page 43
- TDMA

82. A network uses _____ to arrange computers in a single closed loop

Ring topology….confrim

A network uses _____ to arrange computers in a single closed loop.

- Star Topology
- Mesh Topology
- Ring Topology page 25
- Bus Topology

83. NICs can provide all three-connection technologies.

RJ-45 connector for 10 base-T, AUI connector for thicknet and BNC connector for Thinnet…..confirm

NICs can provide all three connection technologies.

Select correct option

RJ-45 Connector for 10Base-T, AUI Connector for Thicknet and BNC Connector for Thinnet ok

RJ-45 Connector for Thicknet, AUI Connector for 10Base-T and BNC Connector for Thinnet

84. Computer networks are classified by _____ factors.

4…confirm

Computer networks are classified by four factors which are as follow:

1) BY SIZE
2) BY CONNECTIVITY:
3) BY MEDIUM:
4) BY MOBILITY:

85. _____ is also called self healing network.

FDDI….confirm

_____ is also called self healing network

Select correct option

ATM

FDDI

86. _____ was the first automated tool required to see whether the given computer is online or not.

PING program….confirm

Now an [illegible] tool is required that looks to see whether the given computer is online or not. For this purpose the first tool is the [illegible] which is shown in the figure below

87. Ethernet uses a _____ bit static addressing scheme in which device is assigned a unique address by the manufacturer.

48….confirm

Ethernet uses a _____ static addressing scheme in which each device is assigned a unique address by the manufacturer.

- 64
- 48
- 32
- 8

88. _____ is designed to detect transmission errors, send one extra bit of information with each character.

Parity….confirm

------- scheme, which is designed to help detect transmissions errors, send one extra bit of information with each character

- Parity
- Checksums

89. Hardware addresses must be _____ on a LAN.

Unique….confirm

Hardware addresses must be ——— on a LAN

Unique PG:34
Common

90. The Fast Ethernet hardware operates at a rate of _____.

100 Mbps…..confirm

the fast Ethernet operates at 100Mbps 3

91. Inside a computer each address mask is stored as a _____ bit value.

32…..confirm

Inside a computer, each address mask is stored as a 32-bit value.

92. The protocol address of the next hop must be ------ to an equivalent hardware address before a packet can be sent.

Translated….confirm

hardware does not know how to locate a computer from a protocol address. The protocol address of the next hop must be translated to an equivalent hardware address before a packet can be sent.

93. _____ protocols of TCP/IP layering model specify how to ensure reliable transfer.

Transport layer….confirm

_____ protocols of TCP/IP layering model specify how to ensure reliable transfer

no answer by Google

- Physical Layer
- Network Interface Layer
- Internet Layer
- **Transport Layer**

94. _____ are two standard implementations to improve computational efficiency.

Hashing and direct indexing….confirm

There are two standard implementations to improve computational efficiency:

- Hashing
- Direct indexing

95. _____ of TCP/IP protocol suit defines the basic characteristics of network hardware.

Physical layer….confirm

14 _ of TCP/IP protocol suit defines the basic characteristics of network hardware

a) Physical Layer

b) Data Link Layer

96. Dotted decimal represents each octet in _____ and uses a dot to separate octets.

Decimal…confirm

binary values when interacting with humans. Dotted decimal represents each octet in decimal and uses a dot to separate octets. This is shown in the figure below

97. In closed-form computation the protocol address assigned to a computer is chosen carefully so that computer's hardware address can be computed from the protocol address using basic Boolean and _____ operations.

Arithmetic…confirm

In Closed-form computation, the protocol address assigned to a computer is chosen carefully so that computer's hardware address can be computed from the protocol address using basic Boolean and arithmetic operations

98. Address Resolution Protocol is mostly used to bind a 32-bit IP address to a _____ Ethernet address.

48-bit…confirm

protocol and hardware addresses. ARP is almost always used to bind a 32-bit IP address to a 48-bit Ethernet address

99. A separate _____ table is used for each physical network.

Address-binding…confirm

100. The ethernet speed was originally _____.

3MBps…..confirm

101. The current standard is _____.

10Mbps….confirm

102. _____ Source is responsible for fragmentation.

a. **IPV6……confirm**

103. Which of the following statement is true regarding ATM?

a. **It is a single technology for voice, video and data.**
b. **It has low jitter and high capacity.**
c. **It uses fixed size, small cells, 48 octet's data.**
d. **All of the above**

104. As a result of ARPA research, the first network was established which was named as _____.

a. **ARPANET…..confrim**

105. _____ protocol uses three way handshake to begin a connection.

a. **TCP……confirm**

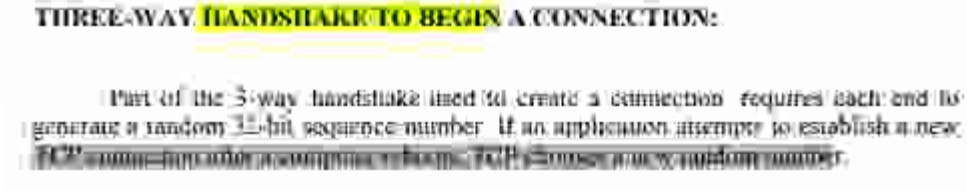

106. NAT device stores state information in translation table.

False…confirm

[illegible] stores state information in table

107. NaT device stores state information in table

True…confirm

[illegible] stores state information in table

108. The number of connections needed for 8 computers in direct point to point communication is equal to _____.

28….confirm

The number of connections needed for 8 computers indirect point to point communications is equal is .....(CS610)

7
26
8
28

109. The bridges communicate with each other on the network and use _____ algorithm to decide which bridge will not forward frames if a cycle occurs.

Distributed Spanning Tree……confirm

The bridges communicate with each other on the network and use Distributed Spanning Tree (DST) algorithm to decide which bridge will not forward frames if a cycle occurs.

110. _____ places the boundary between the second and third octets.

Class B….confirm

Question No: 8 (Marks: 1) - Please choose one
_____ places the boundary between the second and third octets

- Class A
- Class B

111. _____ cannot be extended arbitrarily far or to handle arbitrarily many computers.

LAN…..confirm

18. _____ cannot be extended arbitrarily far or to handle arbitrarily many computers.

1. WAN
2. LAN

112. _____ encapsulates IP datagram as data area in hardware frame.

Network Interface Layer….confirm

113. _____ is standard wireless LAN that uses radio signals at 2.4GHz.

IEEE 802.11…..confirm

114. Missing _____ in a frame format indicates receiving computer missed beginning of the message.

Soh…….confirm

115. Missing _____ indicates sending computer crashed.

Eot….confirm

116. An interior switch is one with wich _____..

No computer is attached…..confirm

64. An interior switch is one with wich _____.

1. Computers are attached.
2. No computer is attached.

117. VBR stands for _____.

Variable Bit Rate….confirm

VARIABLE BIT RATE (VBR)

118. ABR stands for_____.

Available Bit rate….confirm

AVAILABLE BIT RATE (ABR)

119. CBR stands for _____.

Constant Bit rate….confirm

CONSTANT BIT RATE (CBR)

120. If simultaneous transmission occurs, the frames interfere with each other and this phenomenon is called _____.

Collision…..confirm

If [illegible] transmission occurs, the frames interfere with each other and this phenomenon is called collision.

121. The first automated tool required to see whether the given computer is online or not was

PING program…..confirm

[illegible]
Now an automated tool is required that [illegible] whether the given computer is online or not.
[illegible] which is shown in the figure below.

122. The recent executed instruction _____ in temporal aspect of the locality of reference.

is temporarily not referenced

3. The temporal aspect of the locality of reference means _____
a) That the recently executed instruction wont be executed soon
b) That the recently executed instruction is temporarily not referenced
c) That the recently executed instruction will be executed soon again
d) None of the mentioned

View Answer

Answer: c
Explanation: None

123. The _____ of errors is easier than the _____ of errors.

correction, detection

23. The _____ of errors is easier than the _____ of errors.

1. correction, detection

124. ATM header is about _____ of the cell.

10 %

21. ATM header is about _____ of the cell.

1. 100 %
2. 10 %

125. Hardware that calculates a CRC uses two simple components _____.

Shift register and XOR unit….confirm

CRC uses just two hardware components:

- Shift register
- Exclusive OR (XOR) unit

126. _____ is inflexible.

Static routing….confirm

127. Frames include additional information to detect/correct errors are insert by _____.

Sender and Receiver…confirm

128. Fragmentation when using ICMP for path MTU should be avoided.

True…confirm

129. The frame format of any LAN technology must consists of _____ and _____.

Frame header and pay load…..confirm

LAN technology standards define frame format for each technology. All contemporary standards use the following general format

130. SMDS(Switched Multi megabit Data Service) is _____.

Connection less service….confirm

131. Which of the following is not a guided medium?

Atmosphere

132. _____ are more frequently being designed to allow specification of the quality of service required by users.

Networks….confirm

133. The physical addressing in a WAN is similar as in LAN in the way _____.

a. The data is transmitted in packets equivalent to frames.
b. Each packet has a format with header.
c. The packet header includes destination and source addresses.
d. All of the above

134. Two computers with a connection through an ATM network will likely have same VPI/VCI values for each end of the connection.

True….confirm

135. NIC connection in a physical network is known as _____.

LAN wiring scheme…..confirm

136. A _____ is a special-purpose computer dedicated to the task of interconnecting networks.

Router….confirm

137. The third field of the header consists of _____ bit Ethernet frame type.

16

138. _____ is the most popular wiring scheme because of lowest cost.

10 Base T….confirm

139. To span long distances or many computers, networks must replace shared medium with _____.

packet switches….confirm

140. Frame relay is _____.

Connection oriented service….confirm

141. Which multiplexing technique transmits analog signals?

a. FDM
b. TDM
c. WDM
d. Both (a) and (c)….confirm

142. Which of the following is not a benefit of Source Independence?

a. It allows fast and efficient routing.
b. Packet switch need not hove complete information about all destinations.
c. network functions even if topology changes.
d. None of the given……confirm

COMPUTER NETWORKS

(CS610)

HANDOUTS

LECTURERS # 01 – 45

PREPARED BY:

HAMMAD KHALID KHAN

© Copyright Virtual University of Pakistan

Table of contents

Lecture No. 1 ..... **4**
INTRODUCTION 4
Lecture No. 2 ..... **9**
Motivation and Tools 9
Lecture No. 3 ..... **13**
Overview of Data Communication 13
Lecture No. 4 ..... **14**
PACKETS, FRAMES AND ERROR DETECTION 14
PACKETS AND TDM: **15**
Figure 4.2 illustration of TDM 16
Lecture No. 5 ..... **17**
BYTE STUFFING 17
Lecture No. 6 ..... **22**
SHIFT OPERATION 22
Lecture No. 7 ..... **24**
GROWTH OF LAN TECHNOLOGY 24
Lecture No. 8 ..... **28**
CARRIER SENSE MULTIPLE ACCESS (CSMA) 28
Lecture No. 9 ..... **33**
HARDWARE ADDRESSING 33
Lecture No. 10 ..... **35**
FRAME TYPE IDENTIFICATION 35
Lecture No. 11 ..... **39**
INTERFACE HARDWARE 39
Lecture No. 12 ..... **43**
LAN WIRING AND PHYSICAL TOPOLOGY 43
Lecture No. 13 ..... **48**
FIBER MODEMS AND REPEATOERS 48
Lecture No. 14 ..... **51**
BRIDGES 51
Lecture No. 15 ..... **54**
SWITCHES AND WAN TECHNOLOGIES 54
Lecture No. 16 ..... **58**
ROUTING 58
Lecture No. 17 ..... **62**
ROUTING ALGORITHMS 62
Lecture No. 18 ..... **66**
CONNECTION-ORIENTED NETWORKING AND ATM 66
Lecture No. 19 ..... **68**
ATM: VIRTUAL CIRCUITS 68
Lecture No. 20 ..... **72**
ATM AND NETWORK OWNERSHIP 72
Lecture No. 21 ..... **75**
NETWORK SERVICE PARADIGM 75
Lecture No. 22 ..... **79**
NETWORK PERFORMANCE 79

© Copyright Virtual University of Pakistan

Lecture No. 23 ..... **81**
INTERNETWORKING: CONCEPTS, ARCHITECTURE AND PROTOCOLS 81
Lecture No. 24 ..... **85**
IP: INTERNET PROTOCOL ADDRESSES 85
Lecture No. 25 ..... **87**
INTERNET PROTOCOL ADDRESS NOTATIONS 87
Lecture No. 26 ..... **90**
IP SUBNETING 90
Lecture No. 27 ..... **93**
ADDRESS REOLUTION PROTOCOL (ARP) 93
Lecture No. 28 ..... **97**
ARP MESSAGE FORMAT 97
Lecture No. 29 ..... **101**
IP DATAGRAMS AND DATAGRAM FORWARDING 101
Lecture No. 30 ..... **105**
IP ENCAPSULATION, FRAGMENTATION AND REASSEMBLY 105
Lecture No. 31 ..... **110**
THE FUTURE IP (IPV6) 110
Lecture No. 32 ..... **113**
IPv6 AND AN ERROR REPORTING MECHANISM 113
Lecture No. 33 ..... **117**
AN ERROR REPORTING MECHANISM (ICMP) 117
Lecture No. 34 ..... **119**
UDP: DATAGRAM TRANSPORT SERVICE 119
Lecture No. 35 ..... **122**
DATAGRAM FORMAT AND TCP: RELIABLE TRANSPORT SERVICE 122
Lecture No. 36 ..... **125**
TCP: RELIABLE TRANSPORT SERVICE (Cont.) 125
Lecture No. 37 ..... **128**
NETWORK ADDRESS TRANSLATION (NAT) 128
Lecture No. 38 ..... **131**
NETWORK ADDRESS TRANSLATION 131
Lecture No. 39 ..... **133**
IP ROUTING (Part-1) 133
Lecture No. 40 ..... **135**
IP ROUTING (Part-2) 135
Lecture No. 41 ..... **137**
IP ROUTING (Part-3) 137
Lecture No. 42 ..... **139**
IP ROUTING (Part-4) 139
Lecture No. 43 ..... **142**
IP ROUTING (Part-5) 142
Lecture No. 44 ..... **144**
IP ROUTING (Part-6) 144
Lecture No. 45 ..... **147**
COURSE REVISION 147

© Copyright Virtual University of Pakistan

© Copyright Virtual University of Pakistan

Lecture No. 10

FRAME TYPE IDENTIFICATION

There are some problems with the broadcast. For every broadcast frame on the network each computer uses computational resources and places the contents into memory, which interrupt the CPU. It allows system software to make the decision whether to discard or use the frames.

Another problem is that if a pair of computer use broadcasting instead of sending them directly all other computers waste CPU time while discarding the frames.

MULTICASTING:

The solution to above problem is multicasting. It is the restricted form of broadcasting. It works like broadcasting however it does not forward frames automatically to the CPU.

The interface hardware is programmed in advance to accept certain frames that have multicast address as the destination address.

If an application program wishes to receive certain frames then it program the interface hardware to accept an additional set of addresses.

The interface hardware frame then begins accepting three types of frames:

- Multicast frames
- Broadcast frames
- The frames that are distend to the station itself.

MULTICAST ADDRESSING:

We take an example of computers running an audio application. We see that they can receive audio frames if the interface are programmed to received them and the other computers that are not running that audio application will not waste resources

.

IDENTIFYING PACKET CONTENTS:

The destination must get some clue about how to interpret frame data. For this purpose it can use two types which are given as follows.

EXPLICIT FRAME TYPE:

In this type the identifying value is included with frame describes types of included data.

© Copyright Virtual University of Pakistan

IMPLICIT FRAME TYPE:

In implicit frame the receiver must infer from frame data.

HEADERS AND FRAME FORMAT:

LAN technology standards define frame format for each technology. All contemporary standards use the following general format.

a) Frame header b) payload

Frame header has address and other identifying information.
Information typically in fields has fixed size and location. The data area may vary in size.

The Ethernet frame format is shown in the figure.

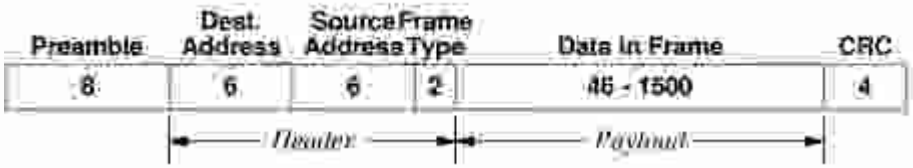

Figure 10.1 the Ethernet frame format

The different friends of ether frame format and their purposes is explained below:

FIELD	PURPOSE
Preamble	Receiver synchronization
Destination Address	Identifies intended receiver
Source Address	Hardware address of sender
Frame Type	Type of data carried in frame
Data	Frame payload
CRC	32-bit CRC code

ETHERNET FIELDS:

In Ethernet fields the preamble and CRC is often not shown in frame. The destination address of all is the broadcast address. There is special value reserved for frame type field.

FRAME WITHOUT TYPE FIELDS:

Some LAN technologies do not include a type field.
Sender and receiver can agree on interpretation, which is as follows:
They agree on single data format and use only that format this limits to one type of data. In this way all computers on LAN must use one format. Also they agree to encode the data format into first few bytes of the data field.

© Copyright Virtual University of Pakistan

ENCODING THE DATA TYPE:

The figure illustrates a frame in which the data type is specified by using the data area.

Figure 10.2. Encoding the data type

To ensure interoperability format of encoding area must be universally agreed upon it typically set by standards only.

IEEE 802.2 LLC:

IEEE 802.2 standard includes logical link control (LLC) sub network attachment point (SNAP) header. SNAP/LLC format is widely used for example by Ethernet.
This is shown in figure below:

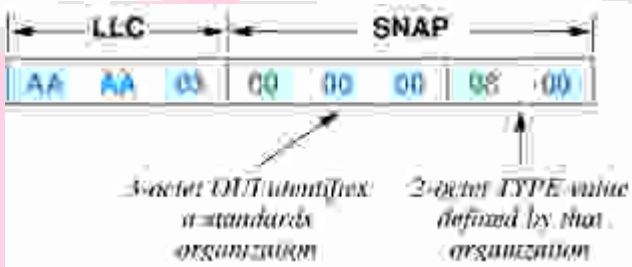

Figure 10.3. SNAP/LLC format

In the figure LLC portion indicates SNAP field to follow OUI (organizationally unique identifier) identifies Ethernet specification organization.

Also the type field is interpreted as in Ethernet (in this case, IP) as shown in figure above.

UNKNOWN TYPES:

For either encoding format some computer may not be prepared to accept frames of some types, which are unknown e.g. protocol type is not installed and the newly defined type.
The receiving computer examines the field and discards any frame with unknown type.

NETWORK ANALYZERS:

A network analyzer also called network monitor or a network sniffer is used to examine the performance of or debug a network.

It can report statistics such as capacity utilization, distribution of frame size, collision rate or token circulation time.

© Copyright Virtual University of Pakistan

OPERATION OF NETWORK ANALYZERS:

The basic idea behind the operation of network analyzer is a computer with a network interface that receives all frames, which is called promiscuous mode.
Many desktop computers have interface that can be configured for promiscuous mode.
When combined with software computer can examine any frame on LAN. In this way the communication across LAN is guaranteed to be private. This computer receives and displays (but does not respond to) frames on the LAN.

Network analyzer can be configured to filter and process frames. It can count frames of specific type of size.
It displays only frames from or to specific computers. In general it can be configured to match any value of any field and capture only these frames meeting the filter specifications.
`

© Copyright Virtual University of Pakistan

Lecture No. 11

INTERFACE HARDWARE

LAN data transmission speeds are typically fast relative to CPU speeds. LANs speeds are defined independent of any specific processor speeds, which allows for mix of any attached systems. In this way new computers can be attached without affecting LAN speeds.

NETWORK INTERFACE HARDWARE:

CPU can't process data at network speeds. So in order to connect to the network computer systems use special purpose hardware for network connections which consists of typically a separate card in the back plane which is called Network Adapter Card or Network Interface Card (NIC).

The connector on NIC at the back of computer then accepts cable to physical network. The CPU structure is shown in the figure.

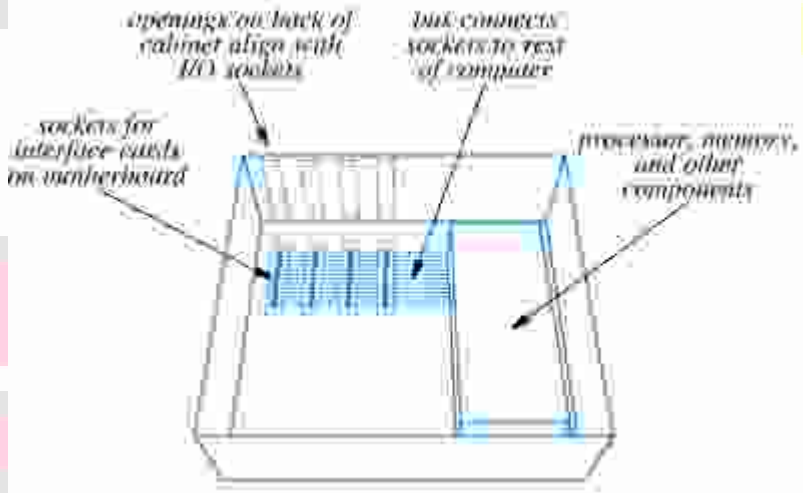

Figure 11.1

The Network Connector is also shown in the figure below.

© Copyright Virtual University of Pakistan

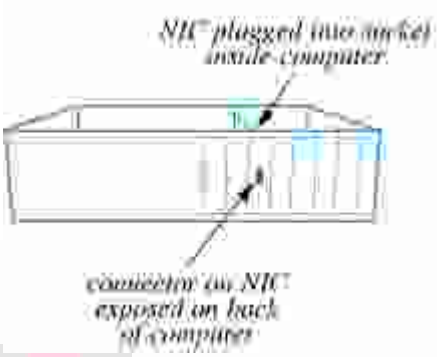

Figure 11.2

NICs AND NETWORK HARDWARE:

NIC is built for one kind of physical network. For example Ethernet interface can not be used with token ring and similarly ATM interface cannot be used with FDDI.

Some NICs can be used with different but similar hardware for example thick, thin and 10 Base-T Ethernet, 10Mbps and 100Mbps Ethernet.

NIC AND CPU PRCESSING:

NIC contains sufficient hardware to process data independent of system CPU. In which some NICs contain separate microprocessor. In addition to this it also include analog circuitry interface to system bus, buffering and processing.

NIC looks like any other I/O device to system CPU. The system CPU forms message request and sends instructions to NIC to transmit data. NIC also receives interrupt on incoming data.

CONNECTION BETWEEN NIC AND PHYSICAL NETWORK:

TWO ALTERNATIVES:

NIC contains all circuitry and connects directly to network medium. A cable from NIC connects to additional circuitry that then attaches to the network medium.

THIN ETHERNET VERSUS 10BASE-T:

Thin Ethernet and 10Base-T are both Ethernet. The network technology is not limited to one style of connection.

© Copyright Virtual University of Pakistan

THICK ETHERNET WIRING:

It uses thick coax cable. AUI cable (or transceiver or drop cable) connects from NIC to transceiver. AUI cable carries digital signal from NIC to transceiver. The transceiver generates analog signal on coax cable. The wires in AUI carry digital signals power and other control signals. Thick Ethernet also requires terminators to avoid signal reflectance. This is shown in the figure below:

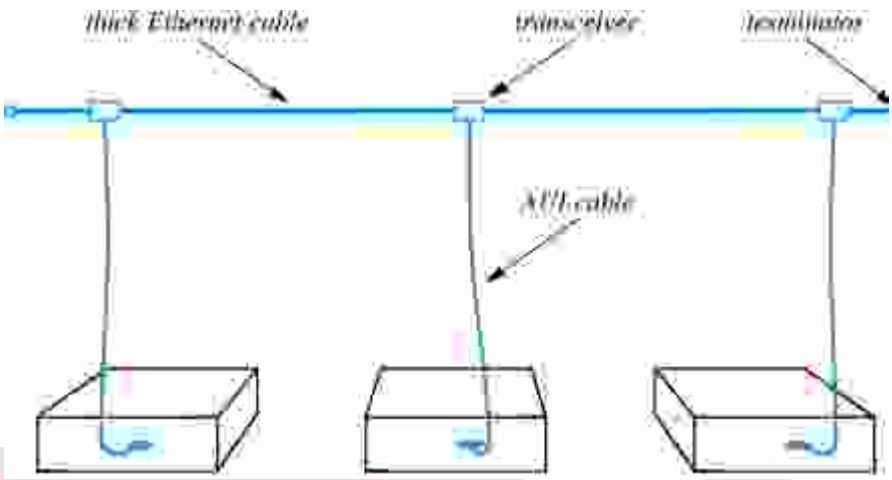

Figure 11.3

CONNECTION MULTIPLEXING:

In some circumstances transceiver may be in convenient e.g. workstations in a LAN. Connection multiplexer connects multiple computers to a single transceiver. Each computer's AUI cable connects to connection multiplexer. One AUI from multiplexer to Ethernet coax. Connection multiplexing is shown in the figure below.

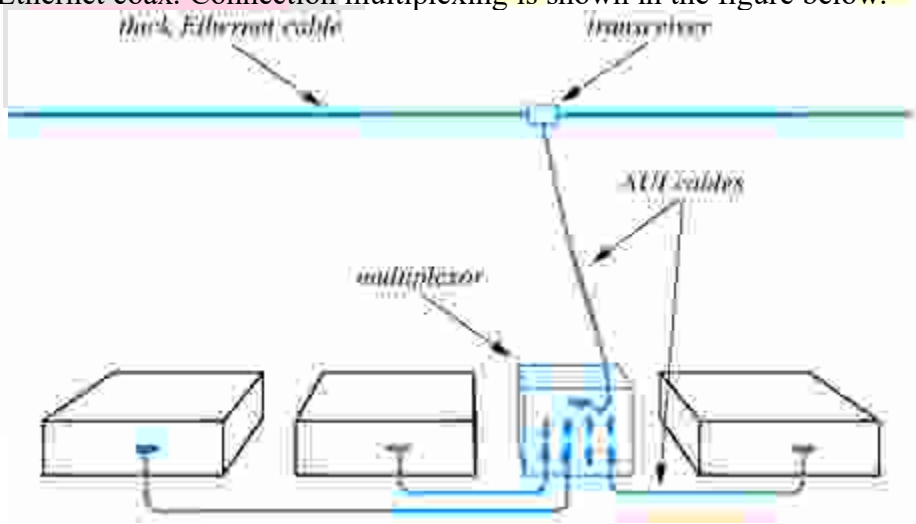

Figure 11.4

© Copyright Virtual University of Pakistan

THIN ETHERNET WIRING:

Thin Ethernet uses thin coax cable that is cheaper and easier to install than thick Ethernet coax. In this case transceiver electronics are built into NIC and NIC connects directly to network medium.

Coax cable use BNC connector on NIC. Coax runs directly to back of each connected computer by T-connector. The T-connector directly attaches to NIC. This is shown in the figure below.

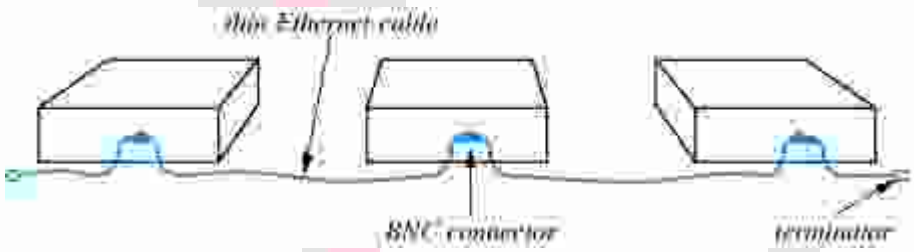

Figure 11.5

Thin Ethernet is useful when many computers are located close to each other. It may be unreliable because any disconnection disrupts entire net.

© Copyright Virtual University of Pakistan

Lecture No. 12

LAN WIRING AND PHYSICAL TOPOLOGY

10BASE-T:

This is another standard of wiring scheme. It is commonly called 10Base-T, Twisted Pair or TP Ethernet. It replaces AUI cable with twisted pair cable and thick coax with hub.

This makes it cheaper and that 's why it is most useful technology of today. It is shown in the figure below:

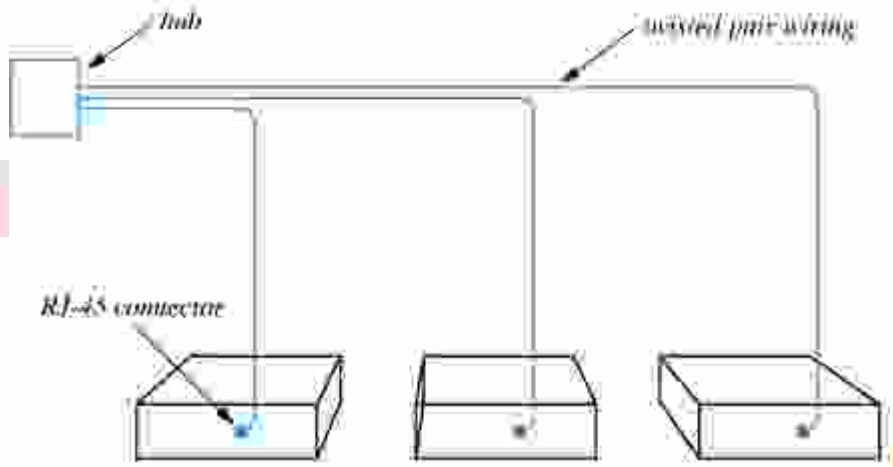

Figure12.1

HUBS:

They are used for extension of connection with multiplexing concept. They are sometimes called Ethernet-in-a-box. It is effectively a very short Ethernet with very long AUI cables. It can be connected into larger Ethernet.

PROTOCOL SOFTWARE AND ETHERNET WIRING:

All wiring technologies use identical Ethernet specifications. e.g. they use same frame format. They use same CSMA/CD algorithms. They can mix different technologies in an Ethernet.

NICs can provide all three-connection technologies. The protocol software can't differentiate among wiring technologies. The NIC is shown in the figure below with three connectors.

© Copyright Virtual University of Pakistan

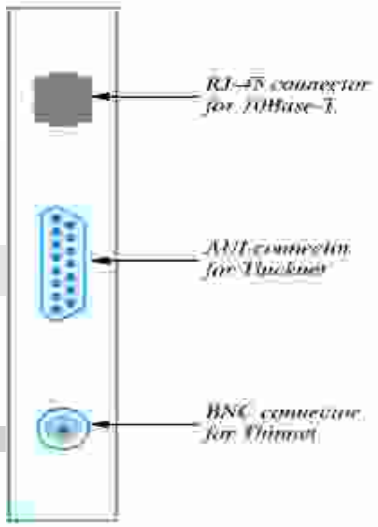

Figure 12.2

COMPARISON OF WIRING SCHEME:

The wiring schemes are compared as follows:

Separate transceiver allows computers to be powered off or disconnected from network without disrupting other communication.

Transceiver may be located in an inconvenient place, so finely malfunction transceiver can be hard.

In other case, thin coax cable takes minimum of cable. Disconnecting one computer (on one loose connection) can disrupt entire network.

Hub wiring centralizes electronics and connections. It makes management easier. Bottom line 10Base-T is most popular because of lowest cost.

TOPOLOGIES AND NETWORK TECHNOLOGIES:

10Base-T network topology is a bus but wiring topology is a star. The token ring network topology is a ring but wiring topology is a star.

We should remember to distinguish between logical and physical topologies. A topology is logically a star or it is physically a star.

FILTERING INCOMING FRAMES:

An analyzer can be configured to filter and process frames. It can count frames of a specific type or size. It can also display only frames from or to specific computers.

© Copyright Virtual University of Pakistan

In general, it can be configured to match value of any field and capture only those frames making the filter specification.

ADVANTAGE AND DISADVANTAGE OF WIRING SCHEMES:

Each of three wiring schemes has advantages and disadvantages, which are explained as follows:

RELIABILITY ISSUES:

Wiring that uses a transceiver for each connection does not affect the entire network if a transceiver cable is disconnected. A cable cut occurring in hub wiring only affects one computer.

COST ISSUES:

Twisted pair Ethernet is the cheapest wiring that makes it so popular. Thicknet is the most costly wiring, which is no longer used.

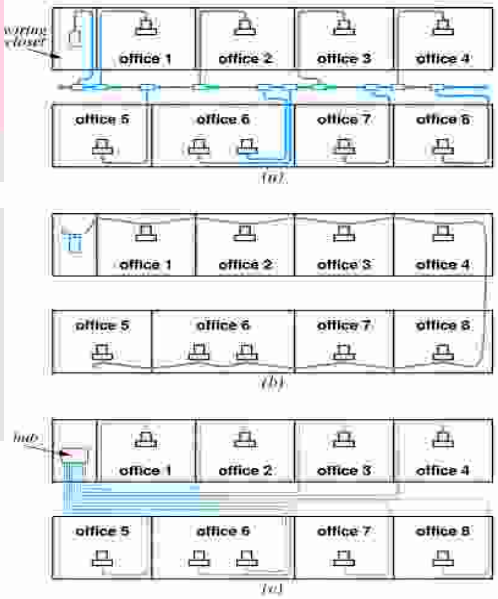

Figure 12.3

As shown in the figure eight offices are wired with

a) Thick Ethernet b) Thin Ethernet c) Twisted pair Ethernet

We can see that the length of wired varies in three schemes so cost varies in three schemes.

© Copyright Virtual University of Pakistan

THE TOPOLOGY PARADOX:

The main feature of twisted pair Ethernet is that it forms a classic star topology however functions like a bus. 10Base-T Ethernet is often called a star shaped bus.

Two different types OF TOPOLOGIES:

LOGICAL TOPOLOGY:

It is defined by the specific network technology.

PHYSICL TOPOLOGY:

It depends on the wiring scheme.

NETWORK INTERFACE CARD AND WIRING SCHEMES:

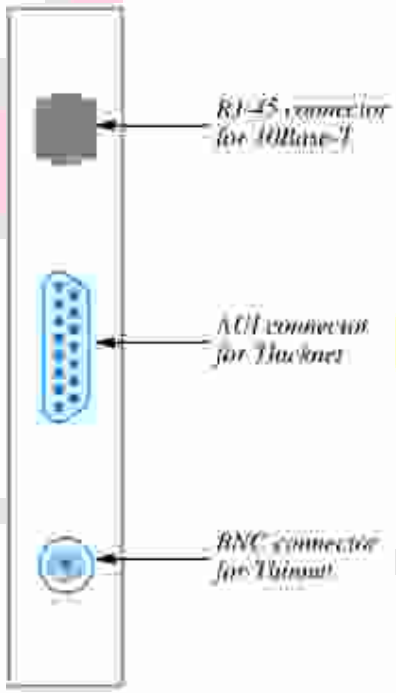

Figure 12.4

To allow changing the wiring without changing the interface hardware, NICs support multiple wiring schemes. it is shown in the figure below.

10/100 NETWORK INTERFACES AND AUTONEGATIATION:

10Base-T version of twisted pair Ethernet operated at 10Mbps. 10Base-T Twisted pair Ethernet operates at 100Mbps.

© Copyright Virtual University of Pakistan

100Base-T technology is backward compatible and allows the participants to negotiate a speed when connection is established. This process is known as auto negotiation.

CATEGORIES OF WIRES:

Cable used for wiring should match the following:

- The intended data rate
- The distance between devices
- The amount of em-noise
- Anticipated future needs
- Cost

Some categories and their typical uses are shown in the figure below.

Category	Bandwidth	Typical Uses
3	16 MHz	older, low-speed networks, analog telephones
4	20 MHz	short distance 10Base-T
5	100 MHz	10Base-T Ethernet, some 100Base-T
5E	100 MHz	100Base-T (Fast Ethernet), some 1000Base-T
6	250 MHz	1000Base-T Gigabit Ethernet, or ATM
7	600 MHz	future (possibly 10 Gigabit Ethernet)

Figure 12.5

WIRING SCHEMES AND OTHER NETWORK TECHNOLOGIES:

Multiple wiring schemes are not limited to Ethernet technology. Almost all-together network technologies use different wiring schemes. e.g., local talk uses hubs (physical star) to simulate a bus topology.

IBM's token ring also uses hubs (physically a star topology) to simulate a logical ring network.

© Copyright Virtual University of Pakistan

Lecture No. 13

FIBER MODEMS AND REPEATOERS

LAN technologies are designed to operate within the same building. However most companies or institutions have offices located far apart from each other.

DISTANCE LIMITATION AND LAN DESIGN:

The maximum cable length of a LAN is fixed because the electrical signal level gets weaker as it travels. The delays must be short to allow access mechanisms (CSMA/CD, token passing) work properly.

However in most cases a LAN needs to be extended layer distances than the maximum Cable length limit.

For example: extending a company LAN to another building.

LAN EXTENSIONS:

Several techniques extend diameter of LAN medium. In this purpose most techniques use additional hardware. LAN signals relayed between LAN segments.

Resulting mixed technology stays within original engineering constraints while spanning greater distance.

FIBER OPTIC EXTENSION:

The LAN extension using fiber optic is shown in the figure below:

Figure 13.1

The fiber-modem coverts digital data into pulses of light then transmits over the optical fiber. It also receives light and converts into digital data.

This mechanism will successfully extend the optical fiber across several kilometers because delays on optical fiber are very low and bandwidth is very high.

© Copyright Virtual University of Pakistan

REPEATERS:

Repeaters are used when copper wire communication is carries out. According to the fact that electrical signal gets weaker while traveling over copper wires. A repeater is used to increase the signal strength. It amplifies the weakening signal received from one segment and then retransmits onto another segment.
It is shown in the figure below:

Figure13.2

One repeater doubles, two repeaters triple the maximum cable length limitation.

Computers attached to different segments communicate as if they are connected to the same cable.

It is to be noted that we cannot increase the maximum cable length as many times as we wish by just adding repeaters. The reason for this is that every repeater introduces a delay and the access mechanism such as CSMA/CD does not work with long delays.

Ethernet standard specifies that any two stations cannot be separated by more than four repeaters.

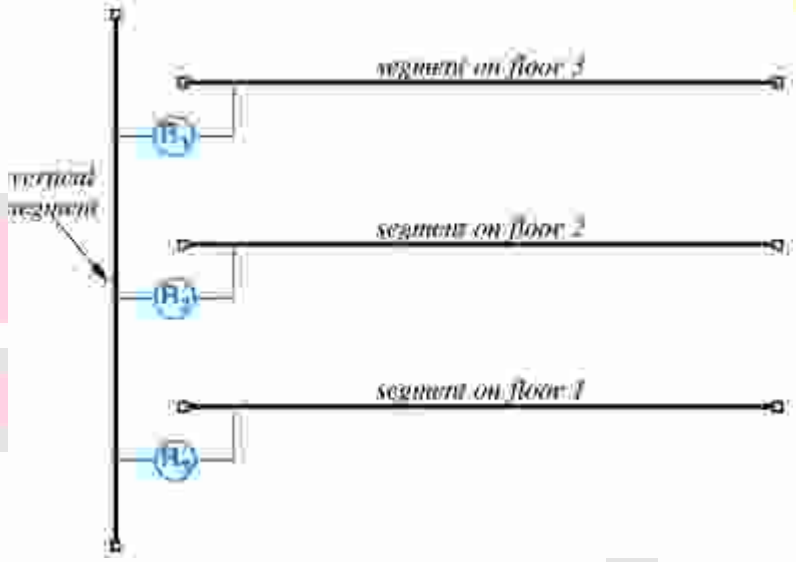

Figure13.3

The figure shows repeaters using the vertical segment. We see that only two repeaters separate any two stations in this scheme.

© Copyright Virtual University of Pakistan

DISADVANTAGES OF REPEATERS:

Repeaters do not recognize frame formats, they just amplify and retransmit the electrical signal. If a collision or error occurs in one segment, repeaters amplify and retransmit also the error onto the other segments.

BRIDGES:

A bridge is a hardware device also used to connect two LAN segments to extend a LAN. Unlike a repeater, a bridge uses two NICs to connect two segments. It listens to all traffic and recognizes frame format. It also forwards only correct complete frames and discards the collided and error frames.

A typical bridge has two NICs, a CPU a memory and a ROM. It only runs the code stored in its ROM.

FRAME FILTERING:

The most important task a bridge performs is frame filtering. If both the source and destination are on the same segment, it does not forward the frame to the other segment. A frame is forwarded to the other segment, if it id destined to that segment. Broadcast and multicast frames are also forwarded.

A bridge keeps a list for each segment that consists of physical addresses of the computer attached to that segment. In this way a bridge knows on which segment a destination computer is attached.

Most bridges are self learning bridges. As soon as a frame arrives to a bridge, it extracts a source address from its header and automatically adds it in the list for that segment. In this way a bridge builds up address lists. This is shown in the figure below:

Event	Segment 1 List	Segment 2 List
Bridge boots	–	–
U sends to V	U	–
V sends to U	U, V	–
Z broadcasts	U, V	Z
Y sends to Y	U, V	Z, Y
Y sends to X	U, V	Z, Y
X sends to W	U, V	Z, Y, X
W sends to Z	U, V, W	Z, Y, X

Figure 13.4

© Copyright Virtual University of Pakistan

Lecture No. 14

BRIDGES

STARTUP AND STEADY STATE:

When a bridge first boots the address lists are empty (start up state). The bridge forwards frames to the other segment if it can not find its destination address in its lists.

After some time when the bridge has received at least one frame from every computer, it has the lists built (steady state) it forwards frames as far it is necessary.

PLANNING A BRIDGE NETWORK:

In a steady state, a bridge allows simultaneous use of each segment. When designing a LAN, bridges can be installed to divide the LAN into segments to improve performance.

For example:

Frequently contacting computers can be attached to the same segment. The frame traffic on one segment does not affect the other segments.

BRDGING BETWEEN BUILDINGS:

If two buildings are located far from each other, a bridge, a pair of fiber modems and an optical fiber can be used to connect two LANs as shown in the figure below.

Figure14.1

© Copyright Virtual University of Pakistan

BRIDGING BETWEEN BUILDINGS:

ADVANTAGES:

COST:

An optical fiber modem pair is sufficient to connect many computers located on separate buildings.

MAINTAINANCE:

There is no need to change the wiring between the buildings when installing and removing a computer.

PERFORMANCE:

The traffic on each building does not affect the other.

BUIDING ACROSS LONGER DISTANCES:

It is not always possible to connect two sites with optical fiber because the distance may be too long. It is usually not allowed to lay an optical fiber if the land does not belong to you.

There are two common methods to connect two distant sites.

LEASED SERIAL LINE CONNECTION: Which is less distant.

LEASED SATELLITE CHANNEL:

It can span arbitrarily long distance. It is shown in the figure below.

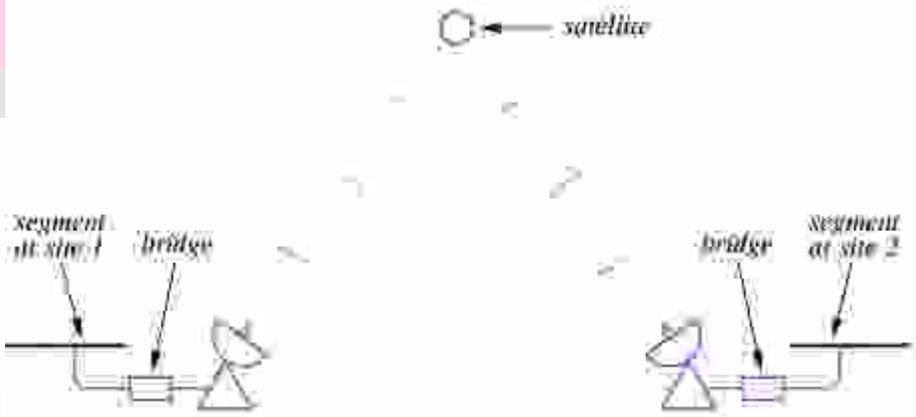

Figure14.2

© Copyright Virtual University of Pakistan

Unlike optical fibers, satellite connections are low bandwidth to save cost. Because the frames arrived from local network are much faster than they can be sent across a satellite link.

The bridge must use buffering (saving a copy of frame into memory until it can be sent). It may run out of memory. The communication software usually waits for a response after sending a few frames.

A CYCLE OF BRIDGES:

A bridges network can connect many segments. One bridge is needed to connect each segment to the rest of the bridge network. This is shown in the figure below:

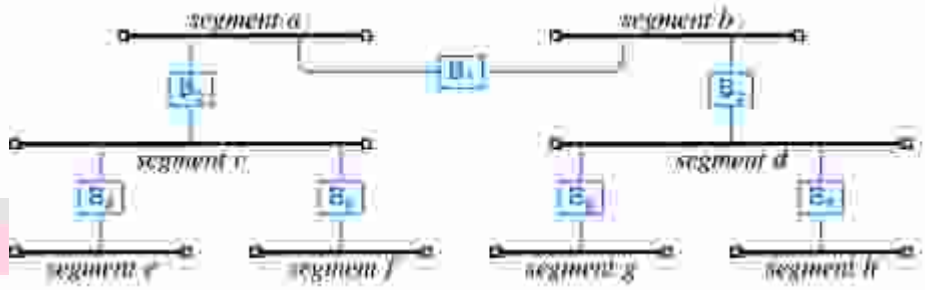

Figure14.3

If the bridges on the longer network form a cycle, then broadcasting frames introduce a problem i.e. the copies of broadcast frame continuously flows around the cycle (each computer receiving an infinite number of copies). This is shown below.

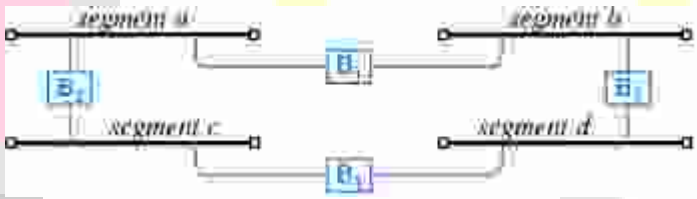

Figure14.4

DISTRIBUTED SPANNING TREE:

If a bridge network forms a cycle, then not all bridges on the network must be allowed to forward broadcast frames.

The bridges configure themselves automatically to decide which bridge will forward broadcast frames and which bridge will not.

The bridges communicate with each other on the network and use Distributed Spanning Tree (DST) algorithm to decide which bridge will not forward frames if a cycle occurs.

© Copyright Virtual University of Pakistan

Lecture No. 15

SWITCHES AND WAN TECHNOLOGIES

SWITCHING:

A switched LAN consists of a single electronic device that transfers frames among the connected computers. A hub with multiple ports simulates a single shared medium. However a switch simulates a bridged LAN with one computer per segment.
A switch is shown in the figure below.

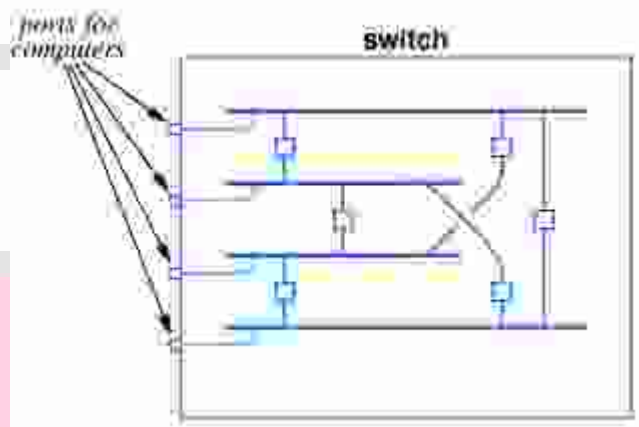

Figure 15.1

If a hub is used to connect among computers on a LAN, then only two computers can communicate at a given time. However if a switch is used, the communication between two computers will not affect the other pair of computers. They can communicate at the same time.

COMBINING SWITCHES AND HUBS:

To reduce costs, computers can be connected and distributed to a number of hubs, and then the hubs can be connected to a switch. Hubs simulate single shared LAN segments and a switch simulates a bridged LAN connecting segments.

BRIDGING AND SWITCHING WITH OTHER TECHNOLOGIES:

Hubs, Bridges and Switches are not limited to Ethernet logical bus topology. They are available also for other networking technologies such as token ring, FDDI etc. like FDDI hub and Token ring hub.

© Copyright Virtual University of Pakistan

WAN TECHNOLOGIES AND ROUTING;

INTRODUCTION:

LANs can be extended using techniques in previous chapter. They can not be extended arbitrarily for or to handle many computers. Because there are distance limitations even with extensions so we need other technologies for larger networks.

CHARACTERIZATION OF NETWORKS:

There are three types of characterization of networks.

LOCAL AREA NETWORK (LAN):
It is used for a single building.

METROPOLOTAN AREA NETWORK (MAN):
It is used for a single city.

WIDE AREA NETWORK (WAN):
It is used for a country level networking and even for continents.

DIFFERENCE BETWEEN LAN AND WAN:

Although LAN is for a local area but satellite bridge can extend LAN across large distances. But it still can't accommodate arbitrarily many computers.

On the other hand WAN must be scalable to long distances and many computers.

PACKET SWITCHES:

To span long distances or many computers, networks must replace shared medium with packet switches. Each switch moves an entire packet from one connection to another. That's why they are called packet switches. A packet switch consists of a small computer with network interfaces, a memory and a program dedicated to packet switching function.

A packet switch is shown in the figure below.

Figure 15.2

© Copyright Virtual University of Pakistan

CONNECTION TO PACKET SWITCHES:

A packet switch many connect to computers and to other packet switches. But the speeds are different in both cases. There are typically high-speed connections to other packet switches but lower speed connections to the computers. The technology details depend upon desired speed.

PACKET SWITCHES AS A BUILDING BLOCKS:

Packet switches can be linked together to form WAN. WAN need not be symmetric or have regular connections. Each switch may connect to one or more other switches and one or more other computers as shown in the figure below.

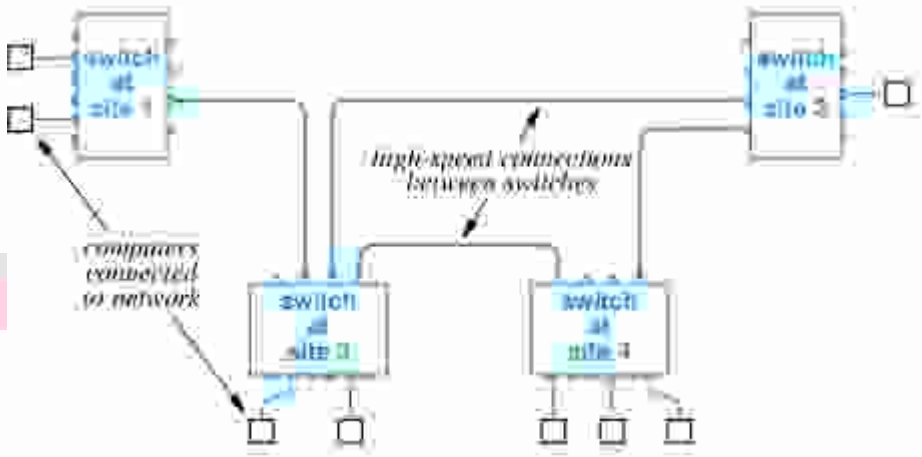

Figure 15.2

STORE AND FORWARD:

Data delivery from one computer to another is accomplished through store and forward technology. In this technology packet switch stores incoming packet and also forwards that packet to another switch or computer. For this purpose packet switch has internal memory into which it can hold packet if outgoing connection is busy. Packets for each connection held on queue.

PHYSICAL ADDRESSING IN A WAN:

The physical addressing in a WAN is similar as in LAN in the following way:

- The data is transmitted in packets equivalent to frames.
- Each packet has a format with header.
- The packet header includes destination and source addresses.
- Many WANs use hierarchical addressing for efficiency. One part of address identifies destination switch. Other part of address identifies port on switch. This is shown in the figure below.

© Copyright Virtual University of Pakistan

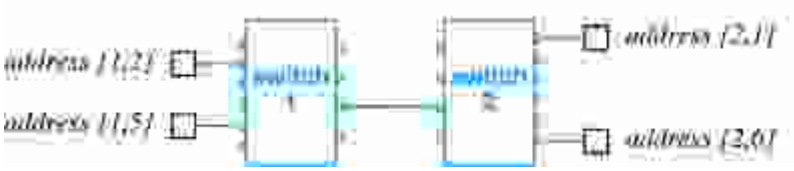

Figure 15.4

NEXT HOP FORWARDING:

Packet switch must choose outgoing connection for forwarding the packet. There are two cases.

- If the destination is local computer, packet switch delivers computer port.
- If the destination is attached another switch, this packet switch forwards to next hop through connection to another switch.
- The choice of another switch is based on destination address in packet.

© Copyright Virtual University of Pakistan

Lecture No. 16

ROUTING

SOURCE INDEPENDENCE:

Next hop to destination does not depend on source of packet. This phenomenon is called 'Source Independence'. It has several benefits. It allows fast and efficient routing. Packet switch need not hove complete information about all destinations in spite it just has next hop so reduces total information and increases dynamic robustness. The network can continue to function even if topology changes without notifying entire network.

HIERARCHICAL ADDRESSING AND ROUTING:

The process of forwarding the packets of information is called routing. The information about destinations is kept in routing tables. Note that many entries have same next hop. It is shown in the figure.

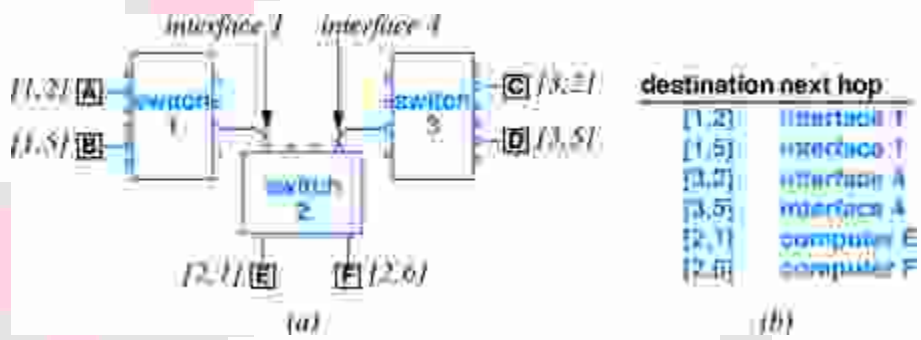

Figure 16.1

In particular all destinations on same switch have same next hop. These routing tables can be collapsed. A specific routing table is shown in the figure.

© Copyright Virtual University of Pakistan

Destination	Next Hop
(1, anything)	interface 1
(3, anything)	interface 4
(2, anything)	local computer

Figure 16.2

ROUTING IN A WAN:

As there will be more computers there will be more traffic of information. We can add capacity to WAN by adding more links and packet switches. Packet switches need not have computers attached. There are two types of switch according to the attached computers.

INTERIOR SWICH:

The switch that has no attached computers is called an interior switch.

EXTERIOR SWITCH:

The switch that has computers attached with it is called exterior switch.
Both interior and exterior switches forward packets and they also need routing tables. The routing table must have two things.

UNIVERSAL ROUTING:

It should have next hop for each possible destination.

OPTIMAL ROUTES:

The next hop in table must be on shortest path to destination.

MODELING A WAN:

To model a WAN, we use a graph in which the nodes model switches and the edges model direct connection between switches. The modeling captures essence of network and it ignores attached computers as shown in the figure below. Modeling of a specific WAN is shown.

© Copyright Virtual University of Pakistan

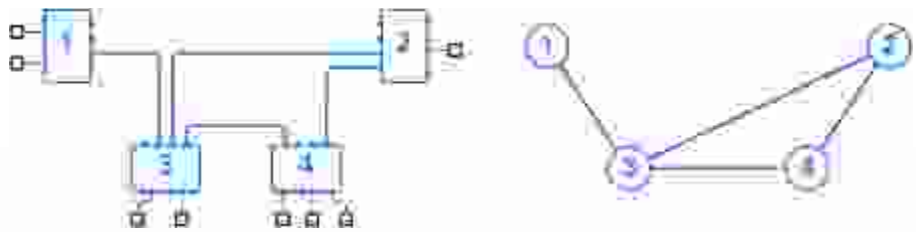

Figure 16.3

ROUTE COMPUTATION WITH A GRAPH:

We can represent routing table with edges as shown in the figure below:

destin-ation	next hop
1	-
2	[1,2]
3	[1,3]
4	[1,2]

node 1

destin-ation	next hop
1	[2,1]
2	-
3	[2,3]
4	[2,4]

node 2

destin-ation	next hop
1	[3,1]
2	[3,2]
3	-
4	[3,4]

node 3

destin-ation	next hop
1	[4,3]
2	[4,2]
3	[4,3]
4	-

node 4

Figure 16.4

The graph algorithms can be applied to find routes.

REDUNDANT ROUTING INFORMATION:

Notice duplication of information in routing table for node 1 as shown above in the figure. We see that switch has only outgoing connection, all traffic must traverse that connection.

DEFAULT ROUTES:

Routing table entries can be collapsed with a default route. If the destination does not have in explicit routing table entry, then it use a default route. Default routes for 4 nodes are shown in the figure below.

© Copyright Virtual University of Pakistan

destin-ation	next hop
1	-
4	(1,3)

node 1

destin-ation	next hop
2	-
4	(2,4)
3	(2,3)

node 2

destin-ation	next hop
1	(3,1)
2	(3,2)
3	-
4	(3,4)

node 3

destin-ation	next hop
2	(4,2)
4	-
3	(4,3)

node 4

Figure 16.5

© Copyright Virtual University of Pakistan

Lecture No. 17

ROUTING ALGORITHMS

BUILDING ROUTING TABLES:

There are basically two methods for building routing tables, which are as follows:

- Manual entry
- Software

Further there are two methods for computing routing table information.

- Static routing
- Dynamic routing

STATIC ROUTING:

It is done at boot time. It is simple and has low network overhead. It is inflexible.

DYNAMIC ROUTING:

It allows automatic updates by a programmer. It can work around network failures automatically.

COMPUTING SHORTEST PATH IN A GRAPH:

While computing shortest path, first we assume graph representation of network at each node then we use Djikstra's algorithm to compute shortest path from each node to every other node. Then extract next hop information from resulting path information and insert next hop information into routing tables.

WEIGHTED GRAPH:

Djikstra's algorithm can accommodate weights on edges in graph. The shortest path is then the path with lowest total weight (sum of the weight with all edges). It should be noted that the shortest path is not necessarily with fewest edges (or hops). For example as shown in the figure below:

© Copyright Virtual University of Pakistan

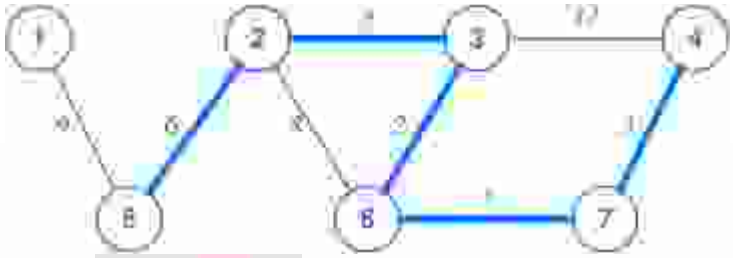

Figure 17.1

The shortest path in the figure from node 2 to node 6 is 2 to 3 and 3 to 6 as this path has the smallest weight so it is the shortest path.

DISTANCE MATRICS:

Weights on graph edges reflect cost of traversing edge. This cost may be in time, dollars or hop counting (weight == 1). The resulting shortest path may not have fewest hops.

DISTRIBUTED ROUTE COMPUTATION:

Each packet switch computes its routing table locally and sends messages to the neighbors. It also updates information periodically. If a link or a packet switch fails then the network adapts its failure. The packet switch then modifies the tables to avoid failed hardware.

DISTANCE-VECTOR ROUTING:

Local information is next hop routing table and distance from each switch. The switches periodically broadcast topology information i.e. destination, distance.

Other switches update routing table based on received information.

VECTOR-DISTANCE ALGORITHM:

It is explained in more detail below:

Packet switches wait for next update message and they iterate through entries in message. If entry has shortest path to destination, insert source as next hop to destination and record distance as distance from next hop to destination plus distance from this switch to next hop.

© Copyright Virtual University of Pakistan

LINK-STATE ROUTING:

In link-state routing network topology is separated from route computation. Switches send link-state information about local connections. Each switch builds own routing tables. It uses link-state information to update global topology and runs Djikstra's algorithm.

COMPARISON:

DISTANCE-VECTOR ROUTING:

- It is very simple to implement.
- Packet switch updates its own routing table first.
- It is used in RIP.

LINK-STATE ALGORITHM:

- It is much more complex.
- Switches perform independent computations.
- It is used in OSPF.

EXAMPLE WAN TECHNOLOGIES:

Some multiple WAN technologies are discussed below.

ARPANET:

It began in 1960's. It was funded by Advanced Research Project Agency, which is an organization of US defense department. It was incubator for many of current ideas, algorithms and Internet technologies.

X.25:

It was early standard for connection-oriented networking. It began from IFU, which was originally CCITT. It predates computer connections, which are used for terminal/time sharing connection.

FRAME RELAY:

It is used for Telco service for delivering blocks of data. It is connection based service and must contract with Telco for circuit between two endpoints. It is typically 56kbps or 1.5Mbps and can run to 100Mbps.

© Copyright Virtual University of Pakistan

SMDS:

Switched Multi megabit Data Service (SMDS) is also a Telco service. It is a connection less service. Any SMDS station can send information to any station on the same SMDS cloud. It is typically ranges from 1.5Mbps to 1000Mbps.

ATM (ASYNCHRONOUS TRANSFER MODE):

It was designed as a single technology for voice, video and data and has low jitter (variance in delivery time) and high capacity.

It uses fixed size, small cells, 48 octet's data and 5 octets header. It can also connect multiple ATM switches into a network.

© Copyright Virtual University of Pakistan

Lecture No. 18

CONNECTION-ORIENTED NETWORKING AND ATM

LANs and WANs can both connect multiple computers, but they have different base technologies and meet different goals. ATM is a single technology that is designed to meet the goals of both LANs and WANs.
ATM uses the concept of connection-oriented networking.

ASYNCHRONOUS TRANSFER MODE (ATM):

Telephone companies (Telco's) introduced ATM to meet several goals. It provides universal service for all subscribers and support for all users for voice, video and data. It has a single unified infrastructure (no separate LANs and WANs). It gives guaranteed service when it is appropriate and support for low cost devices.

JITTER:

Jitter is the term used for variance in transmission delays.
Jitter is significance for voice, video and data. In LANs, jitter can occur when a packet is delayed because the network is busy.

PACKET SIZES:

Large packets result in fewer overheads because a smaller fraction of the packet is used for header information.
Optimum networks use 4kB packets or larger.
Large packets can't easily be used for voice for example 8-bit samples (at 125usec per sample) would require half a second to fill a 4kB packet. Echo cancellation can only be used with low transmission delays.

ATM CELLS:

To meet its goals, ATM uses small, fixed sized packets called cells. Each cell has 53 octets. VPI/VCI fields identify the cells destination.
PRIO tell if cell can be discarded CRC checks the header bits only. ATM header is about the 10% of the cell. Ethernet can have overhead of only 1%. Engineers sometimes call the ATM overhead the cell tax. An ATM is shown below.

© Copyright Virtual University of Pakistan

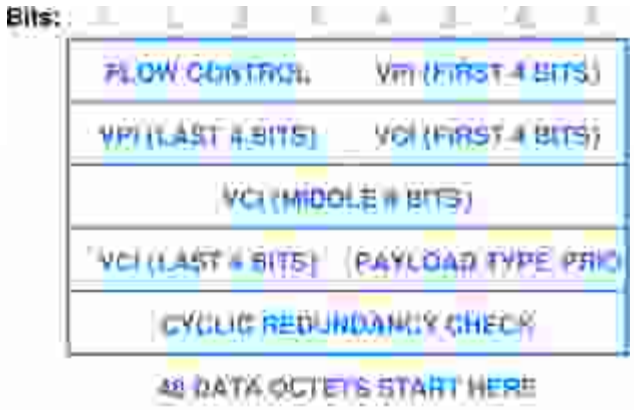

Figure.18.1

CONNECTION-ORIENTED SERVICE:

The connection-oriented service paradigm for networking is similar to the manner in which telephones are used. This is given as follows:

A caller dials a number of the destination. The telephone at the destination signals the arrival of a connection request. If the called person does not answer; the caller gives up after waiting for a timeout. If the called person does answer, then the connection is established.

In data communication, as binary connection identifier is given to each of the two parties to enable identification of the connection.

VIRTUAL CHANNEL (OR CIRCUITS):

Connections in ATM are called virtual channels (VC) or virtual circuits (a term preferred by some). These are called virtual, since connections are formed in ATM by starting values in memory locations (tables) in ATM switches as opposed to making actual electrical connections.

The VC is identified by a 24-bit value formed from the VPI or Virtual Path Indicator (8-bit), which identifies a particular path through the network and the VCI or Virtual Channel Indicator (16-bits), which identifies the channel in the virtual path being used by the connection.

Most frequently, the 24-bit pair is treated as just a single connection identifier by computers.

© Copyright Virtual University of Pakistan

Lecture No. 19

ATM: VIRTUAL CIRCUITS

LABELS AND LABEL SWITCHING:

An ATM network is built from interconnected ATM switches. The attachment points or ports can be connected to computers or other ATM switches. As cells arrive at an ATM switch, their VPI/VCI is modified using a forwarding table that gives the new VPI/VCI for the next leg of the cell's trip.

The forwarding table is essentially indexed by the incoming cell's VPI/VCI and the contents yield the new VPI/VCI.

LABEL REWRITING:

The replacement of the incoming cell's VPI/VCI with a probably different VPI/VCI is called rewriting.

ATM is thus called a label rewriting or label switching system. Thus two computers with a connection through an ATM network will likely have different VPI/VCI values for each end of the connection as shown in the figure below.

Figure 19.1

© Copyright Virtual University of Pakistan

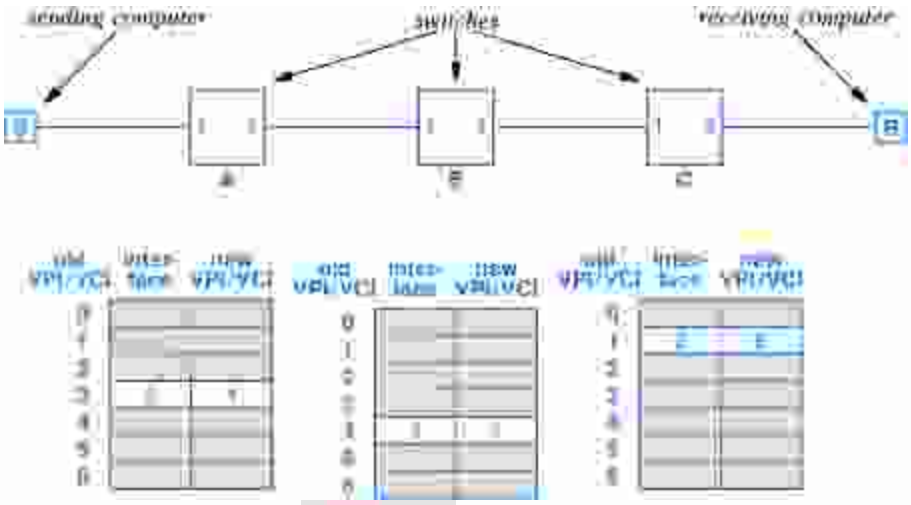

Figure 19.2

EXAMPLE:

As an example, in the figure we see that the sending computer S uses a VPI/VCI of 3 and sends a cell.

Switch A receives the cell and looks up 3, then rewrites the VPI/VCI as 4, and sends the cell out of its port 2.

Switch B receives the cell and looks up 4 then rewrites the VPI/VCI as 1 and sends the cell at its port 2.

Switch C receives the cell and looks up 1 then rewrites the VPI/VCI as 6 and sends the cell out of its port 2.

The receiving computer R receives the cell with a VPI/VCI of 6, which is the value it is using for the connection. Forwarding tables in each switch must be coordinated to define meaningful 'paths' through the network.

PERMANENT VIRTUAL CIRCUITS:

ATM can provide customers with virtual circuits that look like traditional leased digital circuits. Such permanent virtual circuits (PVC) last as long as the customer pay the periodic fee for its use. The forwarding tables are automatically restored after power of equipment failure. The forwarding table entries for such permanent VC's are statically configured, the terms used by Telco's for this is provisioning.

Provisioning requires two steps:

1. To determine a complete path (that is, identify the switches that will be used).
2. To choose appropriate VPI/VCI for each step in the path, and configure each adjacent pair of switches (easy, since each switch rewrites the VCI/VPI).

© Copyright Virtual University of Pakistan

SWITCHED VIRTUAL CIRCUITS:

Most networks offer dynamic connections, which last for a relatively short time. To handle this, ATM can dynamically establish a switched virtual circuit (SVC), allow it last as long as necessary and then terminate it.

The terminology comes from the Telco's where switching system normally refers to all switching.

ESTABLISHING AN SVC:

The computer sends a connection request to the switch to which it is attached. Software in the switch finds a network path to the destination and sends along the connection request.

Each pair of switches in the path communicates to choose a VPI/VCI for their tables. Once the connection is established by the destination, a message is sent back to the originating computer to indicate the SVC is ready.

If any switch or the destination computer does not agree to setting up the VC, an error message is sent back and the SVC is not established.

SIGNALING:

The term signaling is used to describe communication about the network, as opposed to communication that just uses the network.

A computer uses signaling with reserved VCI/VPI values to communicate with a switch to establish a connection or send other network control messages. These connection requests and network control messages are also sent in cells and since the VPI/VCI use in these cells are reserved there is no confusion between data and control cells.

QUALITY OF SERVICE:

Networks are more frequently being designed to allow specification of the quality of service required by users.

For example: - a typical voice telephone call might give a QoS parameter for throughput of 64kbps and delay less than 500msec. A user sending video might require throughput of 2Mbps.

PROVIDING DESIRED QoS:

QoS desires are specified at connection setup time and one never altered for the connection duration. Switches along the path must reserve resources to guarantee the QoS.

If a switch cannot provide the resources, it rejects the connection requests and an appropriate error message is returned.

© Copyright Virtual University of Pakistan

ATM QoS SPECIFICATIONS:

There are three types of QoS specifications, which are given as follows:

CONSTANT BIT RATE (CBR):

It is used for audio and video, since these have predefined maximum data rates.

VARIABLE BIT RATE (VBR):

It is used for compressed audio and video where the data rate depends on the level of compression that can be achieved.

AVAILABLE BIT RATE (ABR):

It is used for typical data applications (where the data rate may be unknown and bursty) and allows use of whatever bandwidth is available at a given time.

© Copyright Virtual University of Pakistan

© Copyright Virtual University of Pakistan

AL-JUNAID INSTITUTE OF GRPOUP

CS610-Computer Network
Solved MCQS for Mid terms papers
Solved by JUNAID MALIK and Team

AL-Junaid Institude
Contact no: 03041659294

LMS Handling

Subject Enrollment

1) Online classes available
HTML, CSS, Javascript
Phyton..etc
2) Solved Graded Activities
- Assignment's
- Quizze's
- GDB's
3) Sloved Quiz File's
4) Short Note's
5) Past paper's & Current paper's

Final project CS619

1) SRS
(Software Requirement's Specification)
2) DD
(Design Document)
3) Test phase + viva
4) Viva preparation
5) Final Deliverable

Website Link
vulmshelp.com

Gmail
junaidfazal08@gmail.com

1. In Cyclic Redundancy Checking, CRC is _____.
a. Divisor
b. Quotient
c. Remainder page 20
d. Dividend
2. The satellite or radio topology in which all computers are connected to each other via satellite or radio wave is a kind of
a. Broadcast network page 5
b. Point-to-Point network
3. Which of the following two operations are performed by Ethernet CD?
I. It monitors outgoing signals.
II. Grabbled signal is interpreted as a collision.
III. Signals are sent back to the sender.

a. I and III
b. II and IV
c. II and III
d. I and II page 28
4. The process of forwarding a packet is called_____.
a. Routing page 58
b. Processing
c. Hierarchical Addressing
d. Source Addressing
4. Which statement is correct about Network Interface Card (NIC)?
I. NIC contains sufficient hardware to process data independent of system CPU
II. NIC looks like any other I/O device to system CPU III.
NIC also receives interrupt on incoming data.
a. I and II
b. II and III
c. I and III
d. All of the given options page 40

For More Visit : vulmshelp.com

-

5. While transmitting data from source A to destination B, 4 bits are changed during the transmission then the error is a _____.
a. Burst error page 22
b. Single error
c. Double error
d. Logic error
6. The switch that has no attached computers is called _____.
a. Packet Switch
b. Exterior Switch
c. Interior Switch page 59
d. External Switch
7. _____ is the most popular wiring scheme because of lowest cost.
a. 5 Base T
b. 10 Base T page 43
c. 100 base T
d. 1000 base T
8. In _____ technique, all members of the network can send data only on the specific time slot?
a. CDMA
b. FDMA
c. CSMA page 43
d. TDMA
9. If a sender with a 100 Megabit NIC and receiver with 10 Megabit NIC wants to communicate with each other at which speed they can communicate?
a. 100 Megabit page 40
b. 110 Megabit
c. 1000 Megabit
d. 10 Megabit
9. Missing _____ in a frame format indicates receiving computer missed beginning of the message.
a. eot
b. soh page 16
c. sot
d. eoh
10. 1The _____ of errors is easier than the _____ of errors.
a. correction; detection
b. detection; correction cs601 handouts
c. correction; creation
d. detection; manipulation

For More Visit : vulmshelp.com

10. 1The _____ of errors is difficult than the _____ of errors.
a. correction; detection google
b. detection; correction
c. correction; creation
d. detection; manipulation

11. 1Source Independence phenomenon allows fast and efficient _____.
a. Source Addressing
b. Routing
c. Packet Switching page 58
d. Store and forward

12. 1In distributed route computation process each packet switch computes its routing table locally and sends messages to the _____.
a. Router
b. Graph
c. Neighbors page 63
d. WAN

13. The ___ layer of the OSI model takes the data from the physical layer and perform error checking.
a. Transport
b. Data link google
c. Application
d. Presentation

14. 1 CBR stands for _____.
a. Constant Byte Rate
b. Constant Bit Rate
c. Connection break Recovery
d. Constant Borrow Rate

15. 1A network that uses _____ usually consist of a single long cable to which computer attach.
a. Star Topology
b. Ring Topology
c. Bus Topology page 26
d. Bus and Ring Topology

16. If simultaneous transmission occurs, the frames interfere with each other and this phenomenon is called _____.
a. packet loss
b. collision page 28
c. delayed transmission
d. coordination

For More Visit : vulmshelp.com

-

16. In _____ all computers are attached to a central hub a. Ring topology
    b. Star topology page 31
    c. Hub topology
    d. Bus topology
17. For adding a new computer in a point to point network _____new connection

will be required
    a. N
    b. N-1 page 23
    c. N-2
    d. 2n

18. 1The fastest Ethernet hardware operates at a rate of _____
    a. 1000 bps
    b. 100 Mbps page 27
    c. 10 Mbps
    d. 1000 Mbps
18. Which of the following the benefit to point to point communication? a. Quick to configure
    b. Security implementation page 23
    c. Cost
    d. Less availability

19. 1 ATM offers _____speed and _____delay
    a. High, High
    b. High, low page 72
    c. Low, low
    d. Low, high

20. 1Thick Ethernet is known as _____
    a. 10 Base 2
    b. 10 Base 5 google
    c. 10 Base T
    d. 10 Base 10

21. Both interior and exterior switches _____packet and they also need routing tables.
    a. Create
    b. Delay
    c. Forward page 59
    d. Start

For More Visit : vumshelp.com

-

22. _____is the rate at which data can be sent through the network
    a. Throughput page 79
    b. Propagation delay
    c. Access delay
    d. Switching delay
23. In a ping command, small –sized information packets of _____are sent.
    a. TCP
    b. UDP
    c. ICMP page 11
    d. IGMP
24. Many WANs use _____addressing of efficiency
    a. Sequence
    b. Forward
    c. Hierarchical page 56
    d. Sequential
25. Which of the following is not a function of ping commends?
    a. Local computer network issue
    b. Congestion in the network
    c. Relay nodes page 11
    d. Remote host availability
26. Packet switched can be linked together to form a _____
    a. LAN
    b. WAN page 56
    c. Bridge
    d. None of the given option
27. Fixed network is a type of network which is classified with repect to the _____factor
    a. Size
    b. Connectivity
    c. Medium
    d. Mobility page 6
28. Parity bit can detect _____error(s)
    a. 4
    b. 3
    c. 2 page 19 (even or odd)
    d. 1

For More Visit : vulmshelp.com

-

29. When we will try to connect to the internet which of the following protocol will be used?
    a. Telnet
    b. TCP/IP page 84
    c. ICMP
    d. IPx
30. How many computers are mandatory to form a network?
    a. 1
    b. 2 google
    c. 4
    d. 8
31. _____ is standard wireless LAN that uses radio signals at 2.4GHz.
    a. IEEE 803.16
    b. IEEE 802.15
    c. IEEE 802.3
    d. IEEE 802.11 page 29
32. LAN interface hardware obeys _____ access rule.
    a. CSMA/CD page 34
    b. Round robin
    c. First come first served
    d. High priority
33. The most important task a bridge performs is _____.
    a. Packet switching
    b. Line controlling
    c. Noise controlling
    d. Frame filtering page 50
34. ATM uses small, fixed-sized packets called cells and each cell has _____ octets.
    a. 47
    b. 52
    c. 53 page 66
    d. 55
36. _____ can't be guaranteed with variable length packets as easily as it can with fixed length cells.
    a. Errors
    b. Noise
    c. Quality of Service page 72
    d. None of the given

For More Visit : vulmshelp.com

-

37. Which multiplexing technique transmits digital signals?
    a. WDM
    b. FDM
    c. TDM page 15
    d. GSM
38. Connections in Asynchronous transfer mode are called _____.
    a. Virtual channels page 67
    b. Virtual Path Identifier
    c. Cells
    d. Cell tax
39. A _____ is a device that combines multiple signals and forwards into a single line.
    a. Modem
    b. Multiplexer page 41
    c. Repeater
    d. Layer 3 Switch
40. _____ is inflexible.
    a. Routing
    b. Searching
    c. Processing
    d. Static routing page 62
41. If a hub is used to connect many computers in a LAN, then only _____ computers can communicate at a given time.
    a. Three
    b. Two page 54
    c. Four
    d. One
42. _____ is the term used for variance in transmission delays.
    a. Friction
    b. Segment
    c. Checksum
    d. Jitter page 66
43. _____ is also called self healing network.
    a. ATM
    b. FDDI
    c. Token Ring page 46
    d. Frame relay

For More Visit : vulmshelp.com

-

44. _____ and _____ are the two frame types.
    a. Internal and external
    b. Single and dual
    c. Implicit and explicit
    d. Multicast and broadcast page 35
45. Bluetooth uses shared medium and _____ instead of coaxial cable.
    a. Radio waves page 29
    b. Infrared waves
    c. Micro waves
    d. Low frequency waves
46. Which of the following is not a guided medium?
    a. Twisted-pair cable
    b. Fiber-optic cable
    c. Atmosphere google
    d. Coaxial cable
47. As a result of ARPA research, the first network was established which was named as _____.
    a. INTERNETWORKING
    b. ARPNET
    c. ARPANET page 9
    d. PACKET NETWORK
48. Asynchronous transfer mode (ATM) can dynamically establish a _____.
    a. Switched virtual circuit page 70
    b. Virtual connection identifier
    c. Virtual path indicator
    d. None of the given options
49. A typical port on an ATM switch operates at _____ or _____ higher.
    a. OC-2 speed (155Gbps)
    b. OC-2 speed (1000Mbps)
    c. OC-3 speed (155Mbps) page 72
    d. OC-3 speed (100Gbps)
50. 10Base-T Ethernet is often called a _____.
    a. ring shaped star
    b. ring shaped bus
    c. star shaped bus page 46
    d. star shaped ring

For More Visit : vulmshelp.com

51. _____ allows automatic updates.
    a. Dynamic routing page 62
    b. Static routing
    c. Routing
    d. Default routing
52. Handling variable length packets leads to memory _____.
    a. Fragmentation page 72
    b. Management
    c. Location
    d. Allocation
53. In order to forward a copy of frame, the bridge uses _____ address.
    a. Network
    b. Destination page 51
    c. IP
    d. Source
54. We may use _____ to extend local area network.
    a. Bridge, Router
    b. Bridge, Hub, Router
    c. Bridge, Hub, Repeater page 149
    d. Bridge, Hub, Repeater, Router
53. All of the given options are the types of delay except _____.
    a. Propagation
    b. Access
    c. Throughput page 79
    d. Queuing
54. While computing shortest path in a graph, next hop information is inserted into _____.
    a. Routing table page 62
    b. Trailer
    c. Header
    d. Register
55. LAN interface uses _____ to copy frame data directly from main memory
    a. DMA page 34
    b. FDDI
    c. Hard disk
    d. Flash

For More Visit : vulmshelp.com

-

56. The Gigabit Ethernet hardware operates at a rate of _____.
    a. 10 Mbps
    b. 100 Mbps
    c. 1000 Mbps reference book page 263
    d. 1000 Gbps

57. In the early resource sharing era, which resources were shared among users?
    a. Computation page 9
    b. Floppy Drives
    c. Hard Disk
    d. Printers

58. If two buildings are located far from each other then bridge, and _____ can be used to connect two LAN.
    a. Optical fiber page 51
    b. Ethernet modem
    c. Switch
    d. NIC

59. Which type of network consists of wireless connection of laptops in a university classroom?
    a. WAN
    b. MAN
    c. Fog
    d. LAN google

60. A typical bridge has _____.
    a. One NIC, a CPU a memory and a ROM.
    b. Two NICs, a CPU a memory and a ROM. page 50
    c. RAM, ROM and CPU.
    d. A cache memory, ROM and CPU.

61. _____ is used for compressed audio and video, where the data rate depends on the level of compression that can be achieved.
    a. Constant Bit Rate
    b. Stable Bit Rate
    c. Variable Bit Rate page 71
    d. Available Bit Rate

62. There are _____ types of data stuffing.
    a. 1
    b. 2 page 17
    c. 0
    d. 5

For More Visit : vulmshelp.com

-

63. Dijkstra's algorithm can accommodate weights on _____ in graph.
    a. Nodes page62
    b. Edges
    c. Path
    d. Connections
64. _____ masks your IP address.
    a. Firewall
    b. Antivirus
    c. VPN
    d. Incognito mode
65. Static routing computes routing table information at _____ time.
    a. Load
    b. Boot page 62
    c. Execute
    d. One
66. _____ was the first automated tool required to see whether the given computer is online or not.
    a. Probing program
    b. PING program page 11
    c. status program
    d. None of the above
67. In which type of error detection, the arithmetic sum is calculated before and after the transmission of data at both communication ends?
    a. CRC
    b. Party
    c. Checksum page 19
    d. Hash Function
68. Computer sends a connection request to the _____ to which it is attached while establishing a switched virtual circuit
    a. Bridge
    b. Switch page 70
    c. VPI
    d. Virtual circuit
69. The bridges communicate with each other on the network and use _____ algorithm to decide which bridge will not forward frames if a cycle occurs.
    a. Djikstra
    b. Shortest path first
    c. Vector distance
    d. Distributed Spanning Tree page 53

For More Visit : vulmshelp.com

70. Ethernet uses a _____ bit static addressing scheme in which each device is assigned a unique address by the manufacturer.
    a. 64
    b. 48
    c. 32
    d. 16
71. Weights on graph edges reflect cost of _____.
    a. Nodes
    b. Traversing edge page 63
    c. Trending edge
    d. Path
72. A _____ relies on the hardware manufacturer to assign a unique physical address to each network interface.
    a. Static addressing scheme page 34
    b. Configurable addressing scheme
    c. Dynamic addressing scheme
    d. None of the given
73. In _____ topology, if the switch goes down all the computers will be disconnected.
    a. Star
    b. Ring
    c. Bus
    d. Mesh
74. Which type of network consists of wired computers in a university classroom?
    a. MAN
    b. PAN
    c. WAN
    d. LAN
75. If you as a network administrator want to know the traffic flow of your data while communicating with a remote computer which of the following will be used to know about intermediate routers?
    a. Ipconfig
    b. Ping page 11
    c. Traceroute
    d. Arp
76. Hardware address is also called _____.
    a. Physical address
    b. Logical address
    c. IP address
    d. Port address

For More Visit : vulmshelp.com

77. Thick Ethernet also requires _____ to avoid signal reflectance.
    a. Transceivers
    b. AUI cable
    c. Drop cable
    d. Terminators page 41
78. Which of the following network is using the TCP/IP model globally?
    a. PAN
    b. SAN
    c. LAN
    d. The Internet
79. VPNs connections are sometimes called _____.
    a. Tunnels page 75
    b. Open networking
    c. Routing
    d. Public network
80. To reduce _____ computers can be connected and distributed to a number of hubs, then the hubs can be connected to a switch.
    a. Costs page 54
    b. Quality
    c. Efficiency
    d. Noise
81. If a _____ is used the communication between two computers will not affect the other pair of computers and they can communicate at the same time
    a. Hub
    b. Switch page 54
    c. Repeater
    d. Amplifier
82. The length of hardware address is _____.
    a. One to ten bytes
    b. One to five bytes
    c. One to six bytes page 34
    d. One to seven bytes
83. A network analyzer is also called _____.
    a. Network manager
    b. Network administrator
    c. Network monitor page 37
    d. Network

For More Visit : vulmshelp.com

84. No any error detection scheme is perfect because transmission errors can affect _____.
   a. Data
   b. Additional Information
   c. Additional information & data google
   d. Transmission medium

85. The token ring network topology is a ring but wiring topology is a _____.
   a. Star page 44
   b. bus
   c. tree
   d. mesh

86. _____ addresses are used in an ethernet frame.
   a. IP page 99
   b. Port
   c. Logical
   d. MAC

87. AUI cable connects from NIC to _____.
   a. BNC Connector
   b. RJ-45 Connector
   c. Transceiver page 41
   d. Terminator

88. Public networks are _____.
   a. More secure than LAN
   b. Flexible page 74
   c. Limited in boundary
   d. Intranet

89. The maximum cable length of a LAN is fixed because _____.
   a. Additional hardware are not suitable for the LAN extension.
   b. The electrical signal level gets weaker as it travels. Page 48
   c. Additional software are not suitable for the LAN extension
   d. The electrical signal level gets stronger as it travels.

90. In _____.network topology is separated from route computation.
   a. Local area
   b. Link-state routing page 64
   c. Static routing
   d. Dynamic routing

For More Visit : vulmshelp.com

-

91. Which layer of the OSI Model directly communicates and controls the transmission medium:
    a. Transmission
    b. Physical
    c. Application
    d. Network
92. In _____ technique data is treated as a sequence of integers and their arithmetic sum is computed and the carry bits are added to the final sum.
    a. CRC
    b. Bit stuffing
    c. Checksum page 19
    d. 2D Parity
93. A network with _____ jitter takes more time to deliver some packets than others.
    a. Zero
    b. High page 80
    c. Low
    d. Moderate
94. A network uses _____ to arrange computers in a single closed loop.
    a. Star Topology
    b. Mesh Topology
    c. Ring Topology page 25
    d. Bus Topology
95. Which of the following tasks is not done by the second layer of the OSI model?
    a. Flow control
    b. Framing
    c. Channel coding google
    d. Error control
96. ATM is a single technology designed to meet the goals of both _____ and _____.
    a. LAN & PAN
    b. LAN & WAN page 66
    c. LAN & MAN
    d. MAN & WAN
97. LAN and WAN are classified according to their _____.
    a. Size page 4
    b. Connectivity
    c. Medium
    d. Mobility

For More Visit : vulmshelp.com

-

98. The identifier that is used for data transfer in the virtual circuit network is called _____.

- **a. Virtual circuit identifier**
- **b. Global address**
- **c. Network identifier**
- **d. IP identifier**

99. In Direct point to point communication adding the Nth computer requires _____ new connections

- **e. N^2**
- **f. N-1**
- **c. (N^2 -N)/2 page 23**
- **d. N (N-1)**

100. Which of the following is the correct function of bridge?

- **a. MTU path discovery**
- **b. Byte stuffing**
- **c. Routing information**
- **d. Filtering and forwarding a frame page 50, 51**

Point to point topology is

- **a. Size based**
- **b. Mobility based**
- **c. Connectivity based page 5**
- **d. Medium based**

101. IEEE LLC / SNAP header is _____which is used to specify the type of date.

- **a. 8 octets google**
- **b. 16 octets**
- **c. 32 octets**
- **d. 64octets**

102. IEEE LLC / SNAP header is _____which is used to specify the type of date.

- **a. CRC**
- **b. Bit stuffing**
- **c. Checksum**
- **d. 2D Parity**

103. What is the largest network in existence?

- **a. The internet google**
- **b. A PAN**
- **c. A Fog**
- **d. Edge Network**

For More Visit : vulmshelp.com

-

104. The frame format of any LAN technology must consists of ____ and___-

a. Payload and CRC
b. Frame header and CRC
c. Payload and Frame type
d. Frame header and payload page 36

105. _____ can occur a LANs when a packet is delayed because the network is busy

a. Jitter page 66
b. Loop
c. Deadlock
d. variance

106. Which of the following cannot be used to extend a LAN?

a. Repeaters
b. Switches
c. Routers
d. Fiber modems

107. Links-state algorithm is used in _____

- **RIP**
- **IGRP**
- **RIPv2**
- **OSPF page 64**

108. **According to size, there are ___classifications of networks**

a. 2 page 2
b. 3
c. 4
d. 5

108. In which topology terminators are used at the end of the cable?

a. Star
b. Bus
c. Ring
d. Mesh

109. 1Switch simulates a _____LAN connecting segments

e. Single
f. Single shared
c. Bridged page 54
d. Complex

110. 1PVS stands for _____

a. Permanent virtual circuit page 69
b. Private virtual circuit
c. Public virtual circuit

For More Visit : vulmshelp.com

-

d. Plastic virtual circuit

111. Hardware that calculates a CRC used two simple components _____

a. AND unit and XOR Unit

b. Shift register and XOR unit page 20

c. Shift register & AND unit

d. Shift register and Shift XCR unit

112. Thin ethernet is known as _____

a. 10 base 2 google

b. 10 base 5

c. 10 base T

d. All of the above

113. If a sender with a 1 Gigabit NIC and receiver with 100 Megabit NIC wants to communicate with each other than at which speed they can communicate

a. 11 Megabit

b. 100 Megabit

c. 1 Gigabit

d. 1.1 Gigabit

114. _____ is used as an alternative of packet for a specific computer network technology

e. Datum

f. Token

g. Ether

d. Frame page 14

115. The sharing of a medium and its link by two or more devices is called ____

a. Modulation

b. Encoding

c. Multiplexing

d. Line discipline

116. The topology each computer is connected to a central hub is called

e. Ring topology

b. Star topology page 5

c. Tree topology

d. Mesh topology

117. Asynchronous transfer mode (ATM) is designed to work on fiber but can be used with _____

a. wireless

b. Twisted pair page 72

c. Wifi

d. Bluetooth

For More Visit : vulmshelp.com

-

118. The basic responsibility of NIC is _____
a. To access medium network
b. To resource allocation
c. To access memory
d. All of the given option
119. 1Frame relay is ____
a. Connection oriented service page 64
b. Connectionless service
c. Typically ranges for 5 Mbps to 1000Mbps
d. Call based
120. The length of time required to send a variable length packet is ____
a. 5 second
b. Variable page 72
c. Constant
d. Fix
121. ABR stands for _____
a. Asynchronous bit rate
b. Asynchronous byte recovery
c. Asynchronous bit redundancy
d. Available bit rate page 71
122. In Token Ring, if all computers are ready to transmit it enforces _____access
a. First come first served
b. Round Robin page 30
c. Shorter delay
d. Last come first served
123. The Ethernet standard specifies that frames are sent using the _____scheme.
a. Differential Manchester
b. Not Return to Zero (NR2)
c. Manchester Encoding page 27
d. Return to Zero (RZ)
124. ATM uses the concept of _____.
a. Connection-oriented page 66
b. Connection-less
c. variable packet size
d. Fixed and variable packet size

For More Visit : vulmshelp.com

-

124. 1Which of the following is a benefit of point to point communication?
a. Quick to configure
b. Security implementation
c. Cost
d. Less availability
125. _____ is not used to extend LAN.
e. Hub
f. Fiber modem
g. Repeater
h. Bridge
126. Which types of VPNs are used for corporate connectivity across companies residing in different geographical locations?
i. Remote access VPNs
j. Peer-to-peer VPNs
k. Country-to-country VPNs
d. Site-to-site VPNs google

127. Star topology is the kind of
- Tree topology
- b. Point-to-point topology page 05
- Broadcast topology
- Ring topology

127. In a _____ state, a bridge allows simultaneous use of each segment.
- Ready
- Steady
- Final
- Startup

128. The network occupies larger areas like cities & countries is called
- LAN
- WAN
- MAN
- All of the above

129. In link state routing _____ send link-state information about local connections.
- Bridges
- Switches
- Routers
- Hubs

For More Visit : vulmshelp.com

-

130. Transmission media are usually categorized as _____.
- Guided or unguided
- Fixed or unfixed
- Determinate or indeterminate
- Metallic or nonmetallic

131. Even parity can be used to check for _____ bit/ bits of errors.
- a. 1 page 18
- 2
- 3
- 0

132. Routing table entries can be _____ with a default route.
- Collapsed
- Redirected
- Emerged
- Guaranteed

133. The system administrator must coordinate to avoid the conflict in _____ hardware addressing scheme.

a. Static
b. Dynamic
c. Configurable
d. Fixed

134. _____ network does not depend on CSMA/CD.
- Ethernet
- Fast Ethernet
- Gigabit Ethernet
- Wireless

135. Which of the following technologies can extend the diameter of LAN medium?
- Fiber optic
- Repeater
- Diameter of LAN medium is not extendable
- Both. Fiber optic and Repeaters

136. Connections are formed in Asynchronous transfer mode by starting values in_____ in ATM switches, as opposed to making actual electrical connections.
- Heap
- Stack
- Virtual Circuit
- d. Memory locations page 67

For More Visit : vulmshelp.com

137. The _____ scheme must be reliable to prevent conflicts. a. Static
b. Dynamic page 34
c. Configurable
d. Fixed
138. Metropolitan area network is used for _____.
a. City page 55
b. Building
c. Country
d. Continent
139. **Which addressing can be only used in the local area networks?**
- **a. IP google**
- **Physical**
- **Port**
- **Protocol**

139. The sharing of a _____ among the workers in an office is a goal of resource sharing.
a. Mouse
b. Printer page 9
c. Keyboard
d. Motherboard
140. ATM uses fixed size, small cells, 48 octet's data and _____.
a. 3 Octets header
b. 5 Octets header page 65
c. 6 Octets header
d. 7 Octets header
141. Which of the followings is not an advantage of framing?
a. Missing eot indicates sending computer crashed
b. Missing soh indicates receiving computer missed beginning of message
c. Delimiters do not contain any user data page 16
d. Bad frame is discarded
142. The _____ field of Ethernet frame has the purpose of receiver synchronization.
a. Preamble page 36
b. Frame Type
c. Data
d. CRC

For More Visit : vulmshelp.com

Cs-610 Important Mid Term Mcq's Solution 100% Correct : Solve By Vu-Topper RM!!

Question No:1 (Marks:1) Vu-Topper RM
Uses counter rotating rings in which data flows in opposite directions.
Ans: FDDI Page 31

Question No:2 (Marks:1) Vu-Topper RM
The Ethernet speed was originally 3Mbps, and the current standard is ……. the fast Ethernet operates at 100Mbps.
Ans: 10Mbps Page27

Question No:3 (Marks:1) Vu-Topper RM
Mapping between a protocol address and a hardware address is called_ .
Segmentation
Hashing
Address Resolution

Question No:4 (Marks:1) Vu-Topper RM
Protocols of TCP/IP layering model specify how to organize data into frame and how a computer transmits frames over a network.
Session
Network interface layer
Internet Layer

Question No:5 (Marks:1) Vu-Topper RM
In Closed-form computation, the protocol address assigned to a computer is chosen carefully so that computer's hardware address can be computed from the protocol address using basic Boolean and operations.
Arithmetic
XOR
Shift

Question No:6 (Marks:1) Vu-Topper RM
As the Internet grew, the original Classful addressing scheme became a limitation. The IP address space was being exhausted because all networks had to choose one of possible sizes.
Three
two
four

For More Help Vu-Topper RM Contact What's app 03224021365

Question No:7 **(Marks:1)** **Vu-Topper RM**
Dotted decimal notation is a syntactic form the IP software uses to express binary values when interacting with humans.
8-bit
16-bit
32-bit

Question No:8 **(Marks:1)** **Vu-Topper RM**
protocols of TCP/IP layering model specify how to ensure reliable transfer.
Physical Layer
Network Interface Layer
Transport Layer

Question No:9 **(Marks:1)** **Vu-Topper RM**
In the IP address identifies an individual computer on the network.
Prefix
Suffix
Mux

Question No:10 **(Marks:1)** **Vu-Topper RM**
Internet protocol (IP) address version 4 is comprised of bits.
48
32
24

Question No:11 **(Marks:1)** **Vu-Topper RM**
A separate table is used for each physical network.
bit-binding
Checksum
address-binding

Question No:12 **(Marks:1)** **Vu-Topper RM**
Inside a computer, each address mask is stored as abit value.
48
64
32

Question No:13 **(Marks:1)** **Vu-Topper RM**
Dotted decimal represents each octet in and uses a dot to separate octets.
decimal

For More Help Vu-Topper RM Contact What's app 03224021365

Question No:14 (Marks:1) Vu-Topper RM
of TCP/IP Protocol Suit specifies the format of packets sent across Internet as well as the mechanisms used to forward packets.
Physical Layer
Data Link Layer
Internet Layer

Question No:15 (Marks:1) Vu-Topper RM
The IP class scheme does not divide the address space into equal size class and the classes do not contain the same number of networks.
16-bit
32-bit
48-bit

Question No:16 (Marks:1) Vu-Topper RM
of TCP/IP protocol suit defines the basic characteristics of network hardware.
Physical Layer
Data Link Layer
Internet Layer

Question No:17 (Marks:1) Vu-Topper RM
The protocol address of the next hop must be to an equivalent hardware address before a packet can be sent.
Encrypted
Decrypted
Translated

Question No:18 (Marks:1) Vu-Topper RM
Address Resolution Protocol is mostly used to bind a 32-bit IP address to an _ Ethernet address.
16-bit
48-bit
64-bit

Question No:19 (Marks:1) Vu-Topper RM
TCP/IP defines the term to refer any computer system that connects to a network and runs applications for users.
Router
Host computer
Bridge

For More Help Vu-Topper RM Contact What's app 03224021365

Question No:20 **(Marks:1)** **Vu-Topper RM**
are two standard implementations to improve computational efficiency.
Hashing and Direct indexing
Segmentation and Fragmentation
Queuing and Packetizing

Question No:21 **(Marks:1)** **Vu-Topper RM**
In the IP address identifies the physical network to which the computer is attached.
Prefix
Suffix
Mux

Question No:22 **(Marks:1)** **Vu-Topper RM**
In Cyclic Redundancy Checking, CRC is _____.
Divisor
Quotient
Remainder **page 20**

Question No:23 **(Marks:1)** **Vu-Topper RM**
The satellite or radio topology in which all computers are connected to each other via satellite or radio wave is a kind of
Broadcast network **page 5**
Point-to-Point network

Question No:24 **(Marks:1)** **Vu-Topper RM**
Which of the following two operations are performed by Ethernet CD?
I. **It monitors outgoing signals.**
II. Grabbled signal is interpreted as a collision.
III. Signals are sent back to the sender.
I and III
II and IV
I and II **page 28**

Question No:25 **(Marks:1)** **Vu-Topper RM**
The process of forwarding a packet is called _____.
Routing **page 58**
Processing
Hierarchical Addressing

For More Help Vu-Topper RM Contact What's app 03224021365

Question No:26 **(Marks:1)** **Vu-Topper RM**
Which statement is correct about Network Interface Card (NIC)?
I. NIC contains sufficient hardware to process data independent of system CPU
II. NIC looks like any other I/O device to system CPU
III. NIC also receives interrupt on incoming data.
I and II
II and III
All of the given options **page 40**

Question No:27 **(Marks:1)** **Vu-Topper RM**
While transmitting data from source A to destination B, 4 bits are changed during the transmission then the error is a _____.
Burst error **page 22**
Single error
Double error

Question No:28 **(Marks:1)** **Vu-Topper RM**
The switch that has no attached computers is called _____.
Packet Switch
Exterior Switch
Interior Switch **page 59**

Question No:29 **(Marks:1)** **Vu-Topper RM**
_____ is the most popular wiring scheme because of lowest cost.
5 Base T
10 Base T **page 43**
100 base T

Question No:30 **(Marks:1)** **Vu-Topper RM**
In _____ technique, all members of the network can send data only on the specific time slot?
CDMA
FDMA
CSMA **page 43**

Question No:31 **(Marks:1)** **Vu-Topper RM**
The _____ of errors is difficult than the _____ of errors.
correction; detection **google**

For More Help Vu-Topper RM Contact What's app 03224021365

Question No:32 **(Marks:1)** **Vu-Topper RM**

If a sender with a 100 Megabit NIC and receiver with 10 Megabit NIC wants to communicate with each other at which speed they can communicate?

100 Megabit **page 40**

Question No:33 **(Marks:1)** **Vu-Topper RM**

Missing _____ in a frame format indicates receiving computer missed beginning of the message.

eot

sot

soh **page 16**

Question No:34 **(Marks:1)** **Vu-Topper RM**

Source Independence phenomenon allows fast and efficient _____.

Source Addressing

Routing

Packet Switching **page 58**

Question No:35 **(Marks:1)** **Vu-Topper RM**

In distributed route computation process each packet switch computes its routing table locally and sends messages to the _____.

Router

Graph

Neighbors **page 63**

Question No:36 **(Marks:1)** **Vu-Topper RM**

The ___ layer of the OSI model takes the data from the physical layer and perform error checking.

Transport

Data link **google**

Application

Question No:37 **(Marks:1)** **Vu-Topper RM**

CBR stands for _____.

Constant Byte Rate

Constant Bit Rate

Constant Borrow Rate

For More Help Vu-Topper RM Contact What's app 03224021365

Question No:38 **(Marks:1)** **Vu-Topper RM**
A network that uses _____ usually consist of a single long cable to which computer attach.
Star Topology
Ring Topology
Bus Topology **page 26**

Question No:39 **(Marks:1)** **Vu-Topper RM**
If simultaneous transmission occurs, the frames interfere with each other and this phenomenon is called _____.
packet loss
collision **page 28**
delayed transmission

Question No:40 **(Marks:1)** **Vu-Topper RM**
In _____ all computers are attached to a central hub
Ring topology
Star topology **page 31**
Hub topology

Question No:41 **(Marks:1)** **Vu-Topper RM**
For adding a new computer in a point to point network _____new connection will be required
N
N-1 **page 23**
N-2

Question No:42 **(Marks:1)** **Vu-Topper RM**
The fastest Ethernet hardware operates at a rate of _____
1000 bps
100 Mbps **page 27**
10 Mbps

Question No:43 **(Marks:1)** **Vu-Topper RM**
Which of the following the benefit to point to point communication?
Quick to configure.
Security implementation **page 23**
Cost

For More Help Vu-Topper RM Contact What's app 03224021365

Question No:44 **(Marks:1)** **Vu-Topper RM**
ATM offers _____speed and _____delay
High, High
High, low **page 72**
Low, low

Question No:45 **(Marks:1)** **Vu-Topper RM**
Thick Ethernet is known as _____
10 Base 2
10 Base 5 google
10 Base T

Question No:46 **(Marks:1)** **Vu-Topper RM**
Both interior and exterior switches _____packet and they also need routing tables.
Create
Delay
Forward **page 59**

Question No:47 **(Marks:1)** **Vu-Topper RM**
_____is the rate at which data can be sent through the network
Throughput **page 79**
Propagation delay
Access delay

Question No:48 **(Marks:1)** **Vu-Topper RM**
In a ping command, small –sized information packets of _____are sent.
TCP
UDP
ICMP page 11

Question No:49 **(Marks:1)** **Vu-Topper RM**
Many WANs use _____addressing of efficiency
Sequence
Hierarchical **page 56**

Question No:50 **(Marks:1)** **Vu-Topper RM**
Which of the following is not a function of ping commends?
Relay nodes page 11

For More Help Vu-Topper RM Contact What's app 03224021365

Question No:51 (Marks:1) Vu-Topper RM
Packet switched can be linked together to form a _____
LAN
WAN page 56
Bridge

Question No:52 (Marks:1) Vu-Topper RM
Fixed network is a type of network which is classified with repect to the factor
Size
Connectivity
Mobility page 6

Question No:53 (Marks:1) Vu-Topper RM
Parity bit can detect _____error(s)
4
3
2 page 19

Question No:54 (Marks:1) Vu-Topper RM
When we will try to connect to the internet which of the following protocol will be used?
Telnet
TCP/IP page 84
ICMP

Question No:55 (Marks:1) Vu-Topper RM
How many computers are mandatory to form a network?
1
2 google
4

Question No:56 (Marks:1) Vu-Topper RM
_____ is standard wireless LAN that uses radio signals at 2.4GHz.
IEEE 803.16
IEEE 802.15
IEEE 802.11 page 29

For More Help Vu-Topper RM Contact What's app 03224021365

Question No:57 **(Marks:1)** **Vu-Topper RM**
LAN interface hardware obeys _____ access rule.
CSMA/CD page 34
Round ro

Question No:58 **(Marks:1)** **Vu-Topper RM**
The most important task a bridge performs is _____.
Packet switching
Line controlling
Frame filtering page 50

Question No:59 **(Marks:1)** **Vu-Topper RM**
ATM uses small, fixed-sized packets called cells and each cell has _____ octets.
47
52
53 page 66

Question No:60 **(Marks:1)** **Vu-Topper RM**
_____ can't be guaranteed with variable length packets as easily as it can with fixed length cells.
Errors
Noise
None of the given page 72

Question No:61 **(Marks:1)** **Vu-Topper RM**
Which multiplexing technique transmits digital signals?
WDM
FDM
TDM page 15

Question No:62 **(Marks:1)** **Vu-Topper RM**
Connections in Asynchronous transfer mode are called _____.
Virtual channels page 67
Virtual Path Identifier

Question No:63 **(Marks:1)** **Vu-Topper RM**
A ___ is a device that combines multiple signals and forwards into a single line.
Modem
Multiplexer page 41

For More Help Vu-Topper RM Contact What's app 03224021365

Question No:64 **(Marks:1)** **Vu-Topper RM**
_____ is inflexible.
Routing
Searching
Static routing **page 62**

Question No:65 **(Marks:1)** **Vu-Topper RM**
If a hub is used to connect many computers in a LAN, then only _____ computers can communicate at a given time.
Three
Two **page 54**
Four

Question No:66 **(Marks:1)** **Vu-Topper RM**
_____ is the term used for variance in transmission delays.
Friction
Segment
Jitter **page 66**

Question No:67 **(Marks:1)** **Vu-Topper RM**
_____ is also called self healing network.
ATM
FDDI
Frame relay **page 46**

Question No:68 **(Marks:1)** **Vu-Topper RM**
_____ and _____ are the two frame types.
Internal and external
Single and dual
Multicast and broadcast **page 35**

Question No:69 **(Marks:1)** **Vu-Topper RM**
Bluetooth uses shared medium and _____ instead of coaxial cable.
Radio waves **page 29**
Infrared waves

Question No:70 **(Marks:1)** **Vu-Topper RM**
Which of the following is not a guided medium?
Atmosphere **google**

For More Help Vu-Topper RM Contact What's app 03224021365

Question No:71 **(Marks:1)** **Vu-Topper RM**
As a result of ARPA research, the first network was established which was named as _____.
INTERNETWORKING
ARPNET
ARPANET page 9

Question No:72 **(Marks:1)** **Vu-Topper RM**
Asynchronous transfer mode (ATM) can dynamically establish a _____.
Switched virtual circuit page 70
Virtual connection identifier
Virtual path indicator

Question No:73 **(Marks:1)** **Vu-Topper RM**
A typical port on an ATM switch operates at _____ or _____ higher.
OC-2 speed (155Gbps)
OC-2 speed (1000Mbps)
OC-3 speed (155Mbps) page 72

Question No:74 **(Marks:1)** **Vu-Topper RM**
10Base-T Ethernet is often called a _____.
ring shaped star
ring shaped bus
star shaped bus page 46

Question No:75 **(Marks:1)** **Vu-Topper RM**
_____ allows automatic updates.
Dynamic routing page 62
Static routing
Routing

Question No:76 **(Marks:1)** **Vu-Topper RM**
Handling variable length packets leads to memory _____.
Fragmentation page 72
Management

Question No:77 **(Marks:1)** **Vu-Topper RM**
In order to forward a copy of frame, the bridge uses _____ address.
Destination page 51

For More Help Vu-Topper RM Contact What's app 03224021365

Question No:78 **(Marks:1)** **Vu-Topper RM**
We may use _____ to extend local area network.
Bridge, Router
Bridge, Hub, Router
Bridge, Hub, Repeater **page 149**

Question No:79 **(Marks:1)** **Vu-Topper RM**
All of the given options are the types of delay except _____.
Propagation
Access
Throughput page 79

Question No:80 **(Marks:1)** **Vu-Topper RM**
While computing shortest path in a graph, next hop information is inserted into _____.
Routing table **page 62**
Trailer
Header

Question No:81 **(Marks:1)** **Vu-Topper RM**
LAN interface uses _____ to copy frame data directly from main memory
DMA **page 34**
FDDI
Hard disk

Question No:82 **(Marks:1)** **Vu-Topper RM**
The Gigabit Ethernet hardware operates at a rate of _____.
10 Mbps
100 Mbps
1000 Mbps **page 263**

Question No:83 **(Marks:1)** **Vu-Topper RM**
In the early resource sharing era, which resources were shared among users?
Computation **page 9**
Floppy Drives
Hard Disk
Ethernet modem

For More Help Vu-Topper RM Contact What's app 03224021365

Question No:84 **(Marks:1)** **Vu-Topper RM**
If two buildings are located far from each other then bridge, and _____ can be used to connect two LAN.
Optical fiber **page 51**

Question No:85 **(Marks:1)** **Vu-Topper RM**
Which type of network consists of wireless connection of laptops in a university classroom?
WAN
MAN
LAN **google**

Question No:86 **(Marks:1)** **Vu-Topper RM**
A typical bridge has _____.
One NIC, a CPU a memory and a ROM.
Two NICs, a CPU a memory and a ROM. **page 50**

Question No:87 **(Marks:1)** **Vu-Topper RM**
A cache memory, ROM and CPU.
_____ is used for compressed audio and video, where the data rate depends on the level of compression that can be achieved.
Constant Bit Rate
Stable Bit Rate
Variable Bit Rate **page 71**

Question No:88 **(Marks:1)** **Vu-Topper RM**
There are _____ types of data stuffing.
1
2 **page 17**
0
Question No:89 **(Marks:1)** **Vu-Topper RM**
Dijkstra's algorithm can accommodate weights on _____ in graph.
Nodes **page62**
Edges
Path

Question No:90 **(Marks:1)** **Vu-Topper RM**
_____ masks your IP address.
VPN

For More Help Vu-Topper RM Contact What's app 03224021365

Question No:91 **(Marks:1)** **Vu-Topper RM**
Static routing computes routing table information at _____ time.
Load
Boot **page 62**
Execute

Question No:92 **(Marks:1)** **Vu-Topper RM**
In which type of error detection, the arithmetic sum is calculated before and after the transmission of data at both communication ends?
CRC
Party
Checksum **page 19**

Question No:93 **(Marks:1)** **Vu-Topper RM**
Computer sends a connection request to the _____ to which it is attached while establishing a switched virtual circuit
Bridge
Switch **page 70**
VPI

Question No:94 **(Marks:1)** **Vu-Topper RM**
The bridges communicate with each other on the network and use _____ algorithm to decide which bridge will not forward frames if a cycle occurs.
Djikstra
Shortest path first
Distributed Spanning Tree **page 53**

Question No:95 **(Marks:1)** **Vu-Topper RM**
Ethernet uses a _____ bit static addressing scheme in which each device is assigned a unique address by the manufacturer.
64
48
32

Question No:96 **(Marks:1)** **Vu-Topper RM**
Weights on graph edges reflect cost of _____.
Nodes
Traversing edge **page 63**
Trending edge

For More Help Vu-Topper RM Contact What's app 03224021365

Question No:97 **(Marks:1)** **Vu-Topper RM**
A _____ relies on the hardware manufacturer to assign a unique physical address to each network interface.
Static addressing scheme page 34
Configurable addressing scheme
Dynamic addressing scheme

Question No:98 **(Marks:1)** **Vu-Topper RM**
In _____ topology, if the switch goes down all the computers will be disconnected.
Star
Ring
Bus

Question No:99 **(Marks:1)** **Vu-Topper RM**
Which type of network consists of wired computers in a university classroom?
MAN
PAN
LAN

Question No:100 **(Marks:1)** **Vu-Topper RM**
If you as a network administrator want to know the traffic flow of your data while communicating with a remote computer which of the following will be used to know about intermediate routers?
Ipconfig
Ping page 11
Traceroute

Question No:101 **(Marks:1)** **Vu-Topper RM**
Hardware address is also called _____.
Physical address
Logical address
IP address

Question No:102 **(Marks:1)** **Vu-Topper RM**
Thick Ethernet also requires _____ to avoid signal reflectance.
Transceivers
AUI cable
Terminators page 41

For More Help Vu-Topper RM Contact What's app 03224021365

Question No:103 **(Marks:1)** **Vu-Topper RM**
Which of the following network is using the TCP/IP model globally?
PAN
SAN
The Internet

Question No:104 **(Marks:1)** **Vu-Topper RM**
VPNs connections are sometimes called _____.
Tunnels **page 75**
Open networking
Routing

Question No:105 **(Marks:1)** **Vu-Topper RM**
To reduce _____ computers can be connected and distributed to a number of hubs, then the hubs can be connected to a switch.
Costs **page 54**
Quality
Efficiency

Question No:106 **(Marks:1)** **Vu-Topper RM**
If a _____ is used the communication between two computers will not affect the other pair of computers and they can communicate at the same time
Hub
Switch **page 54**
Repeater

Question No:107 **(Marks:1)** **Vu-Topper RM**
The length of hardware address is _____.
One to ten bytes
One to five bytes
One to six bytes **page 34**

Question No:108 **(Marks:1)** **Vu-Topper RM**
A network analyzer is also called _____.
Network manager
Network administrator
Network monitor **page 37**

For More Help Vu-Topper RM Contact What's app 03224021365

Question No:109 (Marks:1) Vu-Topper RM
No any error detection scheme is perfect because transmission errors can affect _____.
Data
Additional Information
Additional information & data google

Question No:110 (Marks:1) Vu-Topper RM
The token ring network topology is a ring but wiring topology is a _____.
Star page 44
bus
tree

Question No:111 (Marks:1) Vu-Topper RM
_____ addresses are used in an ethernet frame.
IP page 99
Port
Logical

Question No:112 (Marks:1) Vu-Topper RM
AUI cable connects from NIC to _____.
BNC Connector
RJ-45 Connector
Transceiver page 41

Question No:113 (Marks:1) Vu-Topper RM
Public networks are _____.
More secure than LAN
Flexible page 74
Limited in boundary

Question No:114 (Marks:1) Vu-Topper RM
The maximum cable length of a LAN is fixed because _____.
Additional hardware are not suitable for the LAN extension.
The electrical signal level gets weaker as it travels. Page 48

Question No:115 (Marks:1) Vu-Topper RM
In _____.network topology is separated from route computation.
Link-state routing page 64

For More Help Vu-Topper RM Contact What's app 03224021365

Question No:116 **(Marks:1)** **Vu-Topper RM**
Which layer of the OSI Model directly communicates and controls the transmission medium:
Transmission
Physical
Network

Question No:117 **(Marks:1)** **Vu-Topper RM**
A network with _____ jitter takes more time to deliver some packets than others.
Zero
High **page 80**
Low

Question No:118 **(Marks:1)** **Vu-Topper RM**
A network uses _____ to arrange computers in a single closed loop.
Star Topology
Mesh Topology
Ring Topology **page 25**

Question No:119 **(Marks:1)** **Vu-Topper RM**
Which of the following tasks is not done by the second layer of the OSI model?
Flow control
Framing
Channel coding **google**

Question No:120 **(Marks:1)** **Vu-Topper RM**
ATM is a single technology designed to meet the goals of both _____and _____.
LAN & PAN
LAN & WAN **page 66**
LAN & MAN

Question No:121 **(Marks:1)** **Vu-Topper RM**
LAN and WAN are classified according to their _____.
Size **page 4**
Connectivity
Medium

For More Help Vu-Topper RM Contact What's app 03224021365

Question No:122 **(Marks:1)** **Vu-Topper RM**
The identifier that is used for data transfer in the virtual circuit network is called _____.

Virtual circuit identifier
Global address
Network identifier

Question No:123 **(Marks:1)** **Vu-Topper RM**
In Direct point to point communication adding the Nth computer requires_____ new connections

N^2
(N^2 -N)/2 **page 23**
N (N-1)

Question No:124 **(Marks:1)** **Vu-Topper RM**
Which of the following is the correct function of bridge?

MTU path discovery
Byte stuffing
Filtering and forwarding a frame **page 50, 51**

Question No:125 **(Marks:1)** **Vu-Topper RM**
Point to point topology is

Size based
Mobility based
Connectivity based **page 5**

Question No:126 **(Marks:1)** **Vu-Topper RM**
IEEE LLC / SNAP header is _____which is used to specify the type of date.

8 octets **google**
16 octets
32 octets

Question No:127 **(Marks:1)** **Vu-Topper RM**
What is the largest network in existence?

The internet **google**
A PAN
A Fog

For More Help Vu-Topper RM Contact What's app 03224021365

Question No:128 **(Marks:1)** **Vu-Topper RM**
The frame format of any LAN technology must consists of ____ and___-
Payload and CRC
Frame header and CRC
Frame header and payload **page 36**

Question No:129 **(Marks:1)** **Vu-Topper RM**
_____ can occur a LANs when a packet is delayed because the network is busy
Jitter **page 66**
Loop
Deadlock

Question No:130 **(Marks:1)** **Vu-Topper RM**
Which of the following cannot be used to extend a LAN?
Repeaters
Switches
Fiber modems

Question No:131 **(Marks:1)** **Vu-Topper RM**
Links-state algorithm is used in _____
RIP
IGRP
OSPF **page 64**

Question No:132 **(Marks:1)** **Vu-Topper RM**
According to size, there are ___classifications of networks
2 **page 2**
3
4

Question No:133 **(Marks:1)** **Vu-Topper RM**
In which topology terminators are used at the end of the cable?
Star
Bus

Question No:134 **(Marks:1)** **Vu-Topper RM**
Switch simulates a _____LAN connecting segments
Bridged **page 54**

For More Help Vu-Topper RM Contact What's app 03224021365

Question No:135 **(Marks:1)** **Vu-Topper RM**
PVS stands for _____
Permanent virtual circuit **page 69**
Private virtual circuit
Public virtual circuit

Question No:136 **(Marks:1)** **Vu-Topper RM**
Hardware that calculates a CRC used two simple components _____
AND unit and XOR Unit
Shift register and XOR unit **page 20**
Shift register & AND unit

Question No:137 **(Marks:1)** **Vu-Topper RM**
Thin ethernet is known as _____
10 base 2 **google**
10 base 5
10 base T

Question No:137 **(Marks:1)** **Vu-Topper RM**
If a sender with a 1 Gigabit NIC and receiver with 100 Megabit NIC wants to communicate with each other than at which speed they can communicate
11 Megabit
100 Megabit
1 Gigabit

Question No:138 **(Marks:1)** **Vu-Topper RM**
_____ is used as an alternative of packet for a specific computer network technology
Datum
Token
Frame **page 14**

Question No:139 **(Marks:1)** **Vu-Topper RM**
The sharing of a medium and its link by two or more devices is called ____
Modulation
Encoding
Multiplexing

For More Help Vu-Topper RM Contact What's app 03224021365

Question No:140 **(Marks:1)** **Vu-Topper RM**
The topology each computer is connected to a central hub is called
Ring topology
Star topology **page 5**
Tree topology

Question No:141 **(Marks:1)** **Vu-Topper RM**
Asynchronous transfer mode (ATM) is designed to work on fiber but can be used with _____
Wireless
Twisted pair **page 72**
Wifi

Question No:142 **(Marks:1)** **Vu-Topper RM**
The basic responsibility of NIC is _____
To access medium network
To resource allocation
To access memory

Question No:143 **(Marks:1)** **Vu-Topper RM**
Frame relay is ____
Connection oriented service **page 64**
Connectionless service
Typically ranges for 5 Mbps to 1000Mbps

Question No:144 **(Marks:1)** **Vu-Topper RM**
The length of time required to send a variable length packet is ____
5 second
Variable **page 72**
Constant

Question No:145 **(Marks:1)** **Vu-Topper RM**
In Token Ring, if all computers are ready to transmit it enforces _____Access
First come first served
Round Robin **page 30**

Question No:146 **(Marks:1)** **Vu-Topper RM**
The Ethernet standard specifies that frames are sent using the _____ scheme.
Manchester Encoding **page 27**

For More Help Vu-Topper RM Contact What's app 03224021365

Question No:147 **(Marks:1)** **Vu-Topper RM**
ATM uses the concept of _____.
Connection-oriented **page 66**
Connection-less
Variable packet size

Question No:148 **(Marks:1)** **Vu-Topper RM**
Which of the following is a benefit of point to point communication?
Quick to configure
Security implementation
Less availability

Question No:149 **(Marks:1)** **Vu-Topper RM**
_____ is not used to extend LAN.
Hub
Fiber modem
Repeater

Question No:150 **(Marks:1)** **Vu-Topper RM**
Which types of VPNs are used for corporate connectivity across companies residing in different geographical locations?
Remote access VPNs
Peer-to-peer VPNs
Site-to-site VPNs **google**

Question No:151 **(Marks:1)** **Vu-Topper RM**
Star topology is the kind of
Tree topology
Point-to-point topology **page 05**
Broadcast topology

Question No:152 **(Marks:1)** **Vu-Topper RM**
In a _____ state, a bridge allows simultaneous use of each segment.
Ready
Steady

Question No:153 **(Marks:1)** **Vu-Topper RM**
The network occupies larger areas like cities & countries is called
WAN

For More Help Vu-Topper RM Contact What's app 03224021365

Question No:154 **(Marks:1)** **Vu-Topper RM**
In link state routing _____ send link-state information about local connections.
Bridge
Switches
Hubs

Question No:155 **(Marks:1)** **Vu-Topper RM**
Transmission media are usually categorized as _____.
Guided or unguided
Fixed or unfixed
Determinate or indeterminate

Question No:156 **(Marks:1)** **Vu-Topper RM**
Even parity can be used to check for _____ bit/ bits of errors.
1 page 18
2
3

Question No:157 **(Marks:1)** **Vu-Topper RM**
Routing table entries can be _____ with a default route.
Collapsed
Redirected
Emerged

Question No:158 **(Marks:1)** **Vu-Topper RM**
The system administrator must coordinate to avoid the conflict in_____ hardware addressing scheme.
Static
Dynamic
Configurable

Question No:159 **(Marks:1)** **Vu-Topper RM**
_____ network does not depend on CSMA/CD.
Ethernet
Fast Ethernet
Gigabit Ethernet

For More Help Vu-Topper RM Contact What's app 03224021365

Question No:160 (Marks:1) Vu-Topper RM
Which of the following technologies can extend the diameter of LAN medium?
Fiber optic
Repeater
Both. Fiber optic and Repeaters

Question No:161 (Marks:1) Vu-Topper RM
Connections are formed in Asynchronous transfer mode by starting values in_____ in ATM switches, as opposed to making actual electrical connections.
Heap
Stack
Memory locations page 67

Question No:162 (Marks:1) Vu-Topper RM
The _____ scheme must be reliable to prevent conflicts.
Static
Dynamic page 34
Configurable

Question No:163 (Marks:1) Vu-Topper RM
Metropolitan area network is used for _____.
City page 55
Building
Country

Question No:164 (Marks:1) Vu-Topper RM
Which addressing can be only used in the local area networks?
IP google
Physical
Port

Question No:165 (Marks:1) Vu-Topper RM
The sharing of a _____ among the workers in an office is a goal of resource sharing.
Mouse
Printer page 9
Keyboard

For More Help Vu-Topper RM Contact What's app 03224021365

Question No:166 **(Marks:1)** **Vu-Topper RM**
ATM uses fixed size, small cells, 48 octet's data and _____.
Octets header
5 Octets header **page 65**
6 Octets header

Question No:167 **(Marks:1)** **Vu-Topper RM**
Which of the followings is not an advantage of framing?
Missing eot indicates sending computer crashed.
Missing soh indicates receiving computer missed beginning of message.
Delimiters do not contain any user data **page 16**

Question No:168 **(Marks:1)** **Vu-Topper RM**
The _____ field of Ethernet frame has the purpose of receiver synchronization.
Preamble **page 36**
Frame Type
Data

Question No:169 **(Marks:1)** **Vu-Topper RM**
_____ was the first internet available for the first time.
ARPANAT
ARPANET **page 9**

Question No:170 **(Marks:1)** **Vu-Topper RM**
We need packets rather than bits because _____
To compress the data
Sender and receiver need to coordinate to detect transmission errors. Page 14

Question No:171 **(Marks:1)** **Vu-Topper RM**
When an application _____ any data, it makes a copy of the data available to all other computers on the network.
Multicast **page 143**
Broadcast

Question No:172 **(Marks:1)** **Vu-Topper RM**
VBR stands for _____
Virtual Bit Rate
Variable Bit Rate **page 71**

For More Help Vu-Topper RM Contact What's app 03224021365

CS610- Computer Network
MIDTERM EXAMINATION
Spring 2010

Question No: 1 (M a r k s: 1)
No error detection scheme is perfect because transmission errors can affect the additional information as well as the data.

► **True** **(Computer Networks and Internets, page82)**
► False

Question No: 2 (M a r k s: 1)
------ Program sends a message to a remote computer and reports whether the computer responds.

► **Ping** **(Computer Networks and Internets, page9)**
► Traceroute
► ICMP
► Non of the given

Question No: 3 (M a r k s: 1)
---------- was especially concerned about the lack of high powered computers.

► **ARPA** **(Computer Networks and Internets, page5)**
► IEEE
► EIA
► Non of the given

Question No: 4 (M a r k s: 1)
The term -------- is used to denote the definition of a packet used with a specific type of network.
► Packet
► **Frame** **(Computer Networks and Internets, page 73)**
► Data
► None of the given

Question No: 5 (M a r k s: 1)
Computer networks are often called ---------- because they use packet technology.

► Ethernet
► Switch networks
► Packet networks **(Computer Networks and Internets, page 73)**
► None of the given

Question No: 6 (M a r k s: 1)
---------- have advantages arisen from the size and ease of computation.

► CRC
► Parity **(Page 19)**
► Checksums
► None of given

Question No: 7 (M a r k s: 1)
Most LANs that employ ring topology use an access mechanism known as-------

► CSMA/CD
► CSMA/CA
► TOKEN PASSING **(Computer Networks and Internets, page95)**
► None of the given

Question No: 8 (M a r k s: 1)
IEEE LLC/SNAP header is --------, which is used to specify the type of data.

► 8 octets **(Computer Networks and Internets, page112)**
► 8 bytes
► 8 bits
► None of the given

Question No: 9 (M a r k s: 1)
Formally named _____ informally known as the twisted pair Ethernet or TP Ethernet.

► 10 Base 2
► 10 Base 5
► 10 Base T **(Page 43)**
► None of the given

Question No: 10 (M a r k s: 1)
An interface for twisted pair Ethernet must have an _____ connector , and must generate signals according to the_____ specification.

► RJ-45, 10 Base T **(Computer Networks and Internets, page 126)**
► RJ-45, 10 Base 5
► BNC, 10 Base 2
► BNC, 10 Base T

Question No: 11 (M a r k s: 1)
A bridges function in the _____ layers(s).

► Physical (MAC) **Click here for Detail**
► Data link
► Network
► Physical (MAC) and Data link

Question No: 12 (M a r k s: 1)
A Bridge can _____

► Filter a frame
► Forward a frame
► Extend a LAN
► Do all the above **Click here for Detail**

Question No: 13 (M a r k s: 1)
A Bridge forwards or filters a frame by comparing the information in its address table to the frame's_____

► Layer 2 source address
► Source node's physical address
► Layer 2 destination address **Click here for Detail**
► Layer 3 destination address

Question No: 14 (M a r k s: 1)
_____ computes shortest paths in a graph by using weights on edges as a measure of distance.
► Greedy algorithm
► Distance vector algorithm
► Dijksta's algorithm **(Computer Networks and Internets, page112)**
► Non of the given

Muhammad Mosa c Siddiq MCS (3rd)
[illegible]
Campus: Institute of E-Learning & Modern Studies
(IEMS) Samundari

Question No: 15 (M a r k s: 1)
_____ is used for audio and video, since these have predefined maximum data rates

► Constant Bit Rate (CBR) service **(Page 71)**
► Variable Bit Rate (VBR) service
► Available Bit Rate (ABR) service
► None of the given

Question No: 16 (M a r k s: 1)
Unlike Frame Relay and ATM, SMDS (Switched multi-megabit Data service) offers_____ .

► Connectionless service paradigm **(Computer Networks and Internets, page112)**
► Connection oriented service paradigm
► Both Connectionless and Connection-oriented service paradigm
► None of the given

Question No: 17 (M a r k s: 1)
A network with throughput T and delay D has a total of _____ bit in transit at any time.

► T / D
► T x D **(Computer Networks and Internets, page203)**
► T + D
► None of the given

Question No: 18 (M a r k s: 1)
ATM is designed to work on_____.

► Twisted Pair
► Coaxial
► Radio Frequency
► Fiber **(Computer Networks and Internets, page 72)**

Question No: 19 (M a r k s: 1)
Computers attached to an Ethernet use ------ in which a computer waits for the ether to be idle before transmitting a frame.

► CSMA/CD **(Computer Networks and Internets, page 93)**
► CSMA/CA
► TOKEN PASSING
► None of the given

Question No: 20 (M a r k s: 1)
FDDI can transmits data at a rate of ----------

► 100 million bits per second **(Page 314)**
► 10 million bits per second
► 1000 million bits per second
► None of the given

CS610- Computer Network
MIDTERM EXAMINATION
Spring 2010

Question No: 1 (M a r k s: 1)
In Point-to-Point topology there are two topologies.

► Star and Tree
► Tree and Ring
► Star and Ring
► Star and Tree **(Page 5)**
► None of the given

Question No: 2 (M a r k s: 1)
------ Program sends a message to a remote computer and reports whether the computer responds.

► Ping **(Computer Networks and Internets, page9)**
► Traceroute
► ICMP
► Non of the given

Question No: 3 (M a r k s: 1)
------ has no way to determine the cause of the problem.

► ICMP
► Ping **(Computer Networks and Internets, page 11)**
► Trace route
► Non of the given

Muhammad Mosa c Siddiq MCS 13rd
[illegible]
Campus: Institute of E-Learning & Modern Studies
(IEMS) Samundari

Question No: 4 (M a r k s: 1)
The term----- ------- refers to the general concept of a small block of data

► Packet (Page 16)
► Frame
► Data
► None of the given

Question No: 5 (M a r k s: 1)
---------- scheme, which is designed to help detect transmissions errors, send one extra bit of information with each character

► Parity (Computer Networks and Internets, page 77)
► Checksums
► CRC
► None of given

Question No: 6 (M a r k s: 1)
Local Talk is a LAN technology that employs ----------

► Bus topology (Page 30)
► Ring topology
► Star topology
► None of the given

Question No: 7 (M a r k s: 1)
Most LANs that employ ring topology use an access mechanism known as-------

► CSMA/CD
► CSMA/CA
► TOKEN PASSING (Computer Networks and Internets, page95) rep
► None of the given

Question No: 8 (M a r k s: 1)
Ethernet uses a ------ bit static addressing scheme in which each device is assigned a unique address by the manufacturer.

► 64
► 48 (Computer Networks and Internets, page 109)
► 32
► 8

Muhammad Moazzam Siddiq MCS (gold)
Campus: Institute of E-Learning & Modern Studies
(IEMS) Sahiwal

Question No: 9 (M a r k s: 1)
Formally named _____ informally known as the thick wire Ethernet or Thick net.

► 10 Base 2
► 10 Base 5 **Computer Networks and Internets, page 120)**
► 10 Base T
► None of the given

Question No: 10 (M a r k s: 1)
Formally named _____ informally known as the twisted pair Ethernet or TP Ethernet.

► 10 Base 2
► 10 Base 5
► 10 Base T **(Page 43) rep**
► None of the given

Question No: 11 (M a r k s: 1)
The maximum size of an Ethernet segment is_____

► 250 meters
► 500 meters **(Page 27)**
► 700 meters
► None of the given

Question No: 12 (M a r k s: 1)
A Bridge can _____

► Filter a frame
► Forward a frame
► Extend a LAN
► Do all the above **rep** **Click here For Detail**

Question No: 13 (M a r k s: 1)
_____ computes shortest paths in a graph by using weights on edges as a measure of distance.

► Greedy algorithm
► Distance vector algorithm
► Dijksta's algorithm **(Computer Networks and Internets, page112)** **rep**
► Non of the given

Muhammad Moazzam Siddiq MCS (gold)
Campus: Institute of E-Learning & Modern Studies
(IEMS) Sahiwal

Question No: 14 (M a r k s: 1)
_____is used for compressed audio and video where the data rate depends on the level of compression that can be achieved.

► Constant Bit Rate (CBR) service
► Variable Bit Rate (VBR) service **(Page 71)**
► Available Bit Rate (ABR) service
► None of the given

Question No: 15 (M a r k s: 1)
Basic LAN technologies such as Ethernet, Token Ring, and FDDI use a _____.

► Connectionless service paradigm **(Computer Networks and Internets, page112)**
► Connection-oriented service paradigm
► Both Connectionless and Connection-oriented service paradigm
► None of the given

Question No: 16 (M a r k s: 1)
The product of delay and throughput measures the _____ of data that can be present on the network.

► Area
► Volume **(Page 80)**
► Length
► None of the given

Question No: 17 (M a r k s: 1)
A network with throughput T and delay D has a total of _____ bit in transit at any time.

► T / D
► T x D **(Computer Networks and Internets, page203) rep**
► T + D
► None of the given

Question No: 18 (M a r k s: 1)
One repeater _____, two repeaters _____ the maximum cable length limitation.

► doubles, triple **(Page 49)**
► square roots, cude roots
► and, triple
► doubles, cancel

Question No: 19 (M a r k s: 1)
A network uses a ------ if all computers attach to a central point

► Star Topology (Page 25)
► Ring Topology
► Bus Topology
► None of the given

Question No: 20 (M a r k s: 1)
Computers attached to an Ethernet use ------ in which a computer waits for the other to be idle before transmitting a frame.

► CSMA/CD (Computer Networks and Internets, page 93) rep
► CSMA/CA
► TOKEN PASSING
► None of the given

CS610- Computer Network
MIDTERM EXAMINATION
Fall 2008

Question No: 1 (Marks: 1) - Please choose one
A typical port on an ATM switch operates at _____ or higher.
► OC-2 speed (155Mbps)
► OC-3 speed (100Mbps)
► OC-3 speed (155Mbps) (Page 72)
► OC-3 speed (155Gbps)

Question No: 2 (Marks: 1) - Please choose one
The product of delay and throughput measures the _____ of data that can be present on the network.

► Area
► Volume (Page 80) rep
► Length
► None of the given

Question No: 3 (Marks: 1) - Please choose one
_____is used for compressed audio and video where the data rate depends on the level of compression that can be achieved.
► Constant Bit Rate (CBR) service
► Variable Bit Rate (VBR) service (Page 71) rep
► Available Bit Rate (ABR) service
► None of the given

Muhammad Moazzam Siddiq MCS (gold)
Campus: Institute of E-Learning & Modern Studies
(IEMS) Sahiwal

Question No: 4 (Marks: 1) - Please choose one
Which of the following is a connecting device?
- ► Bridge
- ► Repeater
- ► Hub
- ► **All the given** **Click here for Detail**

Question No: 5 (Marks: 1) - Please choose one
A bridges function in the _____ layers(s).
- ► **Physical (MAC)** **rep** **Click here for Detail**
- ► Data link
- ► Network
- ► Physical (MAC) and Data link

Question No: 6 (Marks: 1) - Please choose one
IEEE LLC/SNAP header is --------, which is used to specify the type of data.
- ► **8 octets** **(Computer Networks and Internets, page112)** **rep**
- ► 8 bytes
- ► 8 bits
- ► None of the given

Question No: 7 (Marks: 1) - Please choose one
The third field of the header consists of ------ bit Ethernet frame type.
- ► 48
- ► 32
- ► **16** **(Computer Networks and Internets, page110)**
- ► 8

Question No: 8 (Marks: 1) - Please choose one
An ----------method, the network hardware designers specify how type information is included in the frame and the value use to identify various frame types.
- ► **Explicit frame type** **(Page 35)**
- ► Ideal frame type
- ► Implicit frame type
- ► None of the given

Question No: 9 (Marks: 1) - Please choose one
Local Talk is a LAN technology that employs ----------

- ► Star topology
- ► **Bus topology** **(Page 30) rep**
- ► Ring topology
- ► None of the given

Question No: 10 (Marks: 1) - Please choose one
The Fast Ethernet hardware operates at a rate of --------
- ► 10 Mbps
- **► 100 Mbps (Page 27)**
- ► 1000 Mbps
- ► None of the given

Question No: 11 (Marks: 1) - Please choose one
---------- scheme, which is designed to help detect transmissions errors, send one extra bit of information with each character
- **► Parity (Computer Networks and Internets, page 77) rep**
- ► Checksums
- ► CRC
- ► None of given

Question No: 12 (Marks: 1) - Please choose one
Computer networks are often called ---------- because they use packet technology.
- ► Ethernet
- ► Switch networks
- **► Packet networks (Computer Networks and Internets, page 73) rep**
- ► None of the given

Question No: 13 (Marks: 1) - Please choose one
------ Program sends a message to a remote computer and reports whether the computer responds.
- **► Ping (Computer Networks and Internets, page 9) rep**
- ► Traceroute
- ► ICMP
- ► Non of the given

Question No: 14 (Marks: 1) - Please choose one
In ---------, network occupies larger areas like cities & countries.
- ► LAN
- **► WAN (Page 4)**
- ► MAN
- ► None of the given

Question No: 15 (Marks: 1) - Please choose one
In ----------, network occupies the smaller area like a room a floor or a building

- **► LAN (Page 4)**
- ► WAN
- ► MAN
- ► None of the given

Question No: 16 (Marks: 1) - Please choose one
In Point-to-Point topology there are two topologies.
► Tree and Ring
► Star and Ring
► **Star and Tree** **(Page 5)**
► None of the given

CS610- Computer Network
MIDTERM EXAMINATION
Fall 2008

Question No: 1 (Marks: 1) - Please choose one
_____ has a jitter zero

► None of the given
► Virtual Private Network
► Isochronous Network
► **Asynchronous Network** **(Page 66)**

Question No: 2 (Marks: 1) - Please choose one
Unlike Frame Relay and ATM, SMDS (Switched multi-megabit Data service) offers_____ .

► **Connectionless service paradigm** **(Computer Networks and Internets, page112)**
► Connection oriented service paradigm
► Both Connectionless and Connection-oriented service paradigm
► None of the given

Question No: 3 (Marks: 1) - Please choose one
ATM assigns each VC a _____ identifier that is divided two parts to produce a hierarchy.

► 21-bit
► 22-bit
► 23-bit
► **24-bit** **(Page 67)**

Muhammad Mosa c Siddiq MCS (3rd)
[illegible]
Campus: Institute of E-Learning & Modern Studies
(IEMS) Samundari

Question No: 4 (Marks: 1) - Please choose one
Most WAN systems include a mechanism that can be used to eliminate the common case of duplication routing is called_____

► Hierarchal address
► **Default route** **(Computer Networks and Internets, page172)**
► Shortest path
► None of the given

Question No: 5 (Marks: 1) - Please choose one
The next hop to which a packet is sent depends only on

► **Packet's destination** **(Computer Networks and Internets, page169)**
► Packet's original source
► Path the packet has taken
► Non of the given

Question No: 6 (Marks: 1) - Please choose one
An interface for twisted pair Ethernet must have an _____ connector , and must generate signals according to the_____ specification.

► **RJ-45, 10 Base T** **(Computer Networks and Internets, page 126) rep**
► RJ-45, 10 Base 5
► BNC, 10 Base 2
► BNC, 10 Base T

Question No: 7 (Marks: 1) - Please choose one
When an application---------- data, it makes a copy of the data available to all other computers on the network.

► **Broadcasting** **Click here for Detail**
► Multicasting
► Unicasting
► None of the given

Question No: 8 (Marks: 1) - Please choose one
A ---------- provide a mechanism that a customer can use to set a physical address.

► Static addressing scheme
► **Configurable addressing scheme** **(Page 34)**
► Dynamic addressing scheme
► None of the given

Muhammad Mosa c Siddiq MCS (3rd)
[illegible]
Campus: Institute of E-Learning & Modern Studies
(IEMS) Samundari

Question No: 9 (Marks: 1) - Please choose one
FDDI can transmits data at a rate of -----

► 100 million bits per second **(Page 314) rep**
► 100 million bits per second
► 100 million bits per second
► None of the given

Question No: 10 (Marks: 1) - Please choose one
Computers attached to an ether use ------ in which a computer waits for the ether to be idle before transmitting a frame.

► CSMA/CD **(Computer Networks and Internets, page 93) rep**
► CSMA/CA
► TOKEN PASSING
► None of the given

Question No: 11 (Marks: 1) - Please choose one
---------- have advantages arisen from the size and ease of computation.

► CRC
► Parity **(Page 19) rep**
► Checksums
► None of given

Question No: 12 (Marks: 1) - Please choose one
The term -------- is used to denote the definition of a packet used with a specific type of network.

► Packet
► Frame **(Computer Networks and Internets, page 73)**
► Data
► None of the given

Question No: 13 (Marks: 1) - Please choose one
------ has no way to determine the cause of the problem.

► Ping **(Computer Networks and Internets, page 11) rep**
► Trace route
► ICMP
► Non of the given

Muhammad Mosa (Siddiq MCS 13rd)
[illegible]
Campus: Institute of E-Learning & Modern Studies
(IEMS) Samundari

Question No: 14 (Marks: 1) - Please choose one
------ Program sends a message to a remote computer and reports whether the computer responds.

► Ping (Computer Networks and Internets, page9) rep
► Traceroute
► ICMP
► Non of the given

Question No: 15 (Marks: 1) - Please choose one
In ----------, network occupies the smaller area like a room a floor or a building

► LAN (Page 4) rep
► WAN
► MAN
► None of the given

Question No: 16 (Marks: 1) - Please choose one
No error detection scheme is perfect because transmission errors can affect the additional information as well as the data.
► True (Computer Networks and Internets, page82)
► False

Helping Material

Cs610- Computer Networks By Hammad Khalid Khan
Computer Networks and Internets with Internet Applications, 4/e (With CD) By Comer

Muhammad Moazzam Siddiq MCS (gold)
Campus: Institute of E-Learning & Modern Studies
(IEMS) Sahiwal

DOWNLOAD MIDTERM

PAST PAPERS BY WAQAR SIDDHU

More in PDF From

VU Answer

Get All Solutions.

Question No : 1 of 26 Marks: 1 (Budgeted Time 1 Min)

ATM was designed for _____ and use a_____

Answer (Please select your correct option)

- LANs, Connectionless service paradigm
- WANs, Connectionless service paradigm
- Both LANs and WANs, Connectionless service paradigm
- Both LANs and WANs, Connection-oriented service paradigm

correct

Made By: Waqar Siddhu

Question No : 2 of 26 Marks: 1 (Budgeted Time 1 Min)

In Point-to-Point type of topologies there are two topologies _____.

Answer (Please select your correct option)

- Tree and Ring
- Star and Ring
- Star and Tree

correct

- Bus and Mesh

Made By: Waqar Siddhu

Question No : 3 of 26 Marks: 1 (Budgeted Time 1 Min)

In ---------, network occupies larger areas like cities & countries.

Answer (Please select your correct option)

- LAN
- WAN

correct

- MAN
- CAN

Made By: Waqar Siddhu

Question No : 4 of 26 Marks: 1 (Budgeted Time 1 Min)

Hardware that calculates a CRC uses two simple components.

Answer (Please select your correct option)

- AND unit with XOR unit
- Shift register with XOR unit

correct

- Shift register with AND unit
- Shift register with shift XOR unit

Made By: Waqar Siddhu

Question No : 5 of 26 Marks: 1 (Budgeted Time 1 Min)

A network that uses a ------ usually consist of a single long cable to which computers attach.

Answer (Please select your correct option)

- Star Topology
- Ring Topology
- Bus Topology

correct

- Tree Topology

Made By: Waqar Siddhu

Question No : 6 of 26 Marks: 1 (Budgeted Time 1 Min)

A ---------- provides mechanism that a customer can use to set a physical address.

Answer (Please select your correct option)

- Static addressing scheme
- Configurable addressing scheme

correct

- Dynamic addressing scheme
- Masking

Made By: Waqar Siddhu

Question No : 7 of 26 Marks: 1 (Budgeted Time 1 Min)

Formally named _____ informally known as the thick wire Ethernet or Thick net.

Answer (Please select your correct option)

- 10 Base 2
- 10 Base 5
- 10 Base T

correct

- 100 Base T

Made By: Waqar Siddhu

Question No : 8 of 26 Marks: 1 (Budgeted Time 1 Min)

Preamble field in Ethernet frame consist of _____bits.

Answer (Please select your correct option)

- 8
- 32 correct
- 48
- 64

Made By: Waqar Siddhu

Question No : 9 of 26 Marks: 1 (Budgeted Time 1 Min)

A bridge functions in the _____ layer(s).

Answer (Please select your correct option)

- Physical

correct

- Data link
- Network and Data link
- Physical and Data link

Made By: Waqar Siddhu

Question No : 10 of 26 Marks: 1 (Budgeted Time 1 Min)

Generally a Bridge is used to perform _____.

Answer (Please select your correct option)

- Extend a LAN, Filter and Forward a packet
- Routing
- Filter and Forward a frame

correct

- Filter and Forward a packet

Made By: Waqar Siddhu

Question No : 11 of 26 Marks: 1 (Budgeted Time 1 Min)

_____ technology can support both LAN and WAN connections.

Answer (Please select your correct option)

- Frame relay
- Ethernet
- SMDS
- ATM

correct

Made By: Waqar Siddhu

Question No : 12 of 26 Marks: 1 (Budgeted Time 1 Min)

One repeater _____, two repeaters _____ the maximum cable length limitation.

Answer (Please select your correct option)

- Square root, Cube root
- Double, Triple

correct

- Triple, Quad
- Double, Quad

Made By: Waqar Siddhu

Question No : 13 of 26 Marks: 1 (Budgeted Time 1 Min)

_____is used for compressed audio and video where the data rate is related to level of compression.

Answer (Please select your correct option)

- Constant Bit Rate (CBR) service
- Variable Bit Rate (VBR) service

correct

- Available Bit Rate (ABR) service
- Uniform Bit Rate (UBR) service

Made By: Waqar Siddhu

Question No : 14 of 26 Marks: 1 (Budgeted Time 1 Min)

_____ is used for ordinary data.

Answer (Please select your correct option)

- Available Bit Rate (ABR) service

correct

- Uniform Bit Rate (UBR) service
- Constant Bit Rate (CBR) service
- Variable Bit Rate (VBR) service

Made By: Waqar Siddhu

Question No : 15 of 26 Marks: 1 (Budgeted Time 1 Min)

_____ sends a message to a remote computer and reports whether the computer responds.

Answer (Please select your correct option)

- Telnet
- Ping
  Ping
  correct
- Traceroute
- ICMP

Made By: Waqar Siddhu

Question No : 16 of 26 Marks: 1 (Budgeted Time 1 Min)

A network with throughput T and delay D would have a total no of _____ bits in transit at any time.

Answer (Please select your correct option)

- T + D
- T x D/Unit Time
- T / D
- T x D

correct

Made By: Waqar Siddhu

Question No : 17 of 26 Marks: 1 (Budgeted Time 1 Min)

A network that permits many sources to take turns accessing a shared communication resource is providing a form of _____.

Answer (Please select your correct option)

- Phase Division Multiplexing
- Time Division Multiplexing
- Frequency Division Multiplexing
- Wave Division Multiplexing

Made By: Waqar Siddhu

Question No : 18 of 26 Marks: 1 (Budgeted Time 1 Min)

A network which is based on packets uses a computer which may have _____, memory and_____ for switching.

Answer (Please select your correct option)

- Administration Rights, Algorithm
- Source address, Destination address
- Interface, Program
- Input, Output

Made By: Waqar Siddhu

Question No : 19 of 26 Marks: 1 (Budgeted Time 1 Min)

In direct point to point communication adding the Nth computer requires_____ new connections.

Answer (Please select your correct option)

- N(N - 1)
- N^2
- N - 1
- $(N^2 - N)/2$

correct

Made By: Waqar Siddhu

Question No : 20 of 26 Marks: 1 (Budgeted Time 1 Min)

Computers attached to an ethernet use _____ in which a computer waits for the Ether to be idle before transmitting a frame.

Answer (Please select your correct option)

- CSMA/CD

correct

- CSMA/CA
- Token Passing
- Round Robin

Made By: Waqar Siddhu

Question No : 1 of 26 Marks: 1 (Budgeted Time 1 Min)

ATM was designed for _____ and use a_____

Answer (Please select your correct option)

- LANs, Connectionless service paradigm
- WANs, Connectionless service paradigm
- Both LANs and WANs, Connectionless service paradigm
- Both LANs and WANs, Connection-oriented service paradigm

corrmet Made By: Waqar Siddhu

Question No : 2 of 26 Marks: 1 (Budgeted Time 1 Min)

In broadcast topology there are two categories____.

Answer (Please select your correct option)

- Satellite/Radio and Ring
- Satellite/Radio and Star
- Ring and star
- Satellite/Radio

correct

Made By: Waqar Siddhu

Question No : 3 of 26 Marks: 1 (Budgeted Time 1 Min)

---------- have advantages arisen from the size and ease of computation.

Answer (Please select your correct option)

- CRC
- Parity
- Checksums

correct

- VRC

Made By: Waqar Siddhu

Question No : 4 of 26 Marks: 1 (Budgeted Time 1 Min)

When an application---------- data, it makes a copy of the data available to all other computers on the network.

Answer (Please select your correct option)

- Broadcasting
- Multicasting

correct

- Unicasting
- Anycasting

Made By: Waqar Siddhu

Question No : 5 of 26 Marks: 1 (Budgeted Time 1 Min)

Basic LAN technologies such as Ethernet, Token Ring, and FDDI use a _____.

Answer (Please select your correct option)

- Connectionless service paradigm

correct

- Connection-oriented service paradigm
- Both Connectionless and Connection-oriented service paradigm
- Connection-oriented service paradigm without acknowledgment

Made By: Waqar Siddhu

Question No : 6 of 26 Marks: 1 (Budgeted Time 1 Min)

If the sending computer crashes before transmitting a complete frame, the_____will not arrive and the receiver will know that the frame is_____.

Answer (Please select your correct option)

- soh, complete
- soh, incomplete
- eot, incomplete

correct

- eot, complete

Made By: Waqar Siddhu

Question No : 7 of 26 Marks: 1 (Budgeted Time 1 Min)

---------- was especially most concerned about the lack of highly powered computers.

Answer (Please select your correct option)

- ARPA

correct

- IEEE
- EIA
- Goverment

Made By: Waqar Siddhu

Question No : 8 of 26 Marks: 1 (Budgeted Time 1 Min)

"Frame type" field of the header consists of _____ bits.

Answer (Please select your correct option)

- 8
- 10
- 16 correct
- 32

Made By: Waqar Siddhu

Question No : 9 of 26 Marks: 1 (Budgeted Time 1 Min)

Virtual Circuit connection identifier occupies _____bits.

Answer (Please select your correct option)

- 16

correct

- 24
- 32
- 8

Made By: Waqar Siddhu

Question No : 10 of 26 Marks: 1 (Budgeted Time 1 Min)

_____ senses a signal on a cable and then transmits an amplified copy of the signal.

Answer (Please select your correct option)

- Bridge
- Hub
- Transceiver
- Repeater

correct

Made By: Waqar Siddhu

Question No : 11 of 26 Marks: 1 (Budgeted Time 1 Min)

One repeater _____, two repeaters _____ the maximum cable length limitation.

Answer (Please select your correct option)

- Square root, Cube root
- Double, Triple

correct

- Triple, Quad
- Double, Quad

Made By: Waqar Siddhu

Question No : 12 of 26 Marks: 1 (Budgeted Time 1 Min)

A Bridge forwards or filters a frame by comparing the information in its address table to the frame's_____.

Answer (Please select your correct option)

- Layer 2 source address
- Layer 3 source address
- Layer 2 destination address

correct

- Layer 3 destination address

Made By: Waqar Siddhu

Question No : 13 of 26 Marks: 1 (Budgeted Time 1 Min)

A network that permits many sources to take turns accessing a shared communication resource is providing a form of _____.

Answer (Please select your correct option)

- Phase Division Multiplexing
- Time Division Multiplexing
- Frequency Division Multiplexing
- Wave Division Multiplexing

Made By: Waqar Siddhu

Question No : 14 of 26 Marks: 1 (Budgeted Time 1 Min)

No error detection scheme is perfect because transmission errors can affect _____.

Answer (Please select your correct option)

- Data
- Additional Information
- Additional information & data

correct

- Transmission medium

Made By: Waqar Siddhu

Question No : 15 of 26 Marks: 1 (Budgeted Time 1 Min)

LAN that uses ATM technology has a_____.

Answer (Please select your correct option)

- Star topology

  correct

- Bus topology
- Ring topology
- Mesh topology

Made By: Waqar Siddhu

Question No : 16 of 26 Marks: 1 (Budgeted Time 1 Min)

FDDI can transmits data at a rate of _____.

Answer (Please select your correct option)

- 100 million bits per second

correct

- 10 million bits per second
- 1000 million bits per second
- 3 million bits per second

Made By: Waqar Siddhu

Question No : 17 of 26 Marks: 1 (Budgeted Time 1 Min)

The next hop to which a packet is sent depends only on_____.

Answer (Please select your correct option)

- Packet's destination

correct

- Packet's original source
- Path the packet has taken
- Routed Protocol

Made By: Waqar Siddhu

Question No : 18 of 26 Marks: 1 (Budgeted Time 1 Min)

Most WAN systems include a mechanism that can be used to eliminate the common case of duplication routing is called_____.

Answer (Please select your correct option)

- Dynamic route
- Hierarchal address
- Default route

correct

- Shortest path

Made By: Waqar Siddhu

Question No : 19 of 26 Marks: 1 (Budgeted Time 1 Min)

_____ in which delay among packets can vary.

Answer (Please select your correct option)

- Virtual Private Network
- Isochronous Networks
- Asynchronous Networks
- Synchronous Networks

Made By: Waqar Siddhu

Question No : 20 of 26 Marks: 1 (Budgeted Time 1 Min)

A typical port on an ATM switch operates at _____ or higher.

Answer (Please select your correct option)

- OC-2 speed (155Mbps)
- OC-3 speed (100Mbps)
- OC-3 speed (155Mbps)

correct

- OC-3 speed (155Gbps)

Made By: Waqar Siddhu

Question No : 1 of 26 Marks: 1 (Budgeted Time 1 Min)

In ----------, network occupies the smaller area like a room a floor or a building

Answer (Please select your correct option)

- LAN

correct

- WAN
- MAN
- PAN

Made By: Waqar Siddhu

Question No : 2 of 26 Marks: 1 (Budgeted Time 1 Min)

A network that uses a ------ usually consist of a single long cable to which computers attach.

Answer (Please select your correct option)

- Bus Topology

  correct

- Tree Topology
- Star Topology
- Ring Topology

Made By: Waqar Siddhu

Question No : 3 of 26 Marks: 1 (Budgeted Time 1 Min)

A network uses a ------ if all computers attach to a central point

Answer (Please select your correct option)

- Star Topology

  correct

- Ring Topology
- Bus Topology
- Mesh Topology

Made By: Waqar Siddhu

Question No : 4 of 26 Marks: 1 (Budgeted Time 1 Min)

A---------- provides mechanism that automatically assignes a physical address to a station when the station first boots.

Answer (Please select your correct option)

- Static addressing scheme
- Configurable addressing scheme
- Dynamic addressing scheme

correct

- Dynamic Host Configuration

Made By: Waqar Siddhu

Question No : 5 of 26 Marks: 1 (Budgeted Time 1 Min)

---------- was especially most concerned about the lack of highly powered computers.

Answer (Please select your correct option)

- ARPA

  correct

- IEEE
- EIA
- Goverment

Made By: Waqar Siddhu

Question No : 6 of 26 Marks: 1 (Budgeted Time 1 Min)

A bridge functions in the _____ layer(s).

Answer (Please select your correct option)

- Physical

correct

- Data link
- Network and Data link
- Physical and Data link

Made By: Waqar Siddhu

Question No : 7 of 26 Marks: 1 (Budgeted Time 1 Min)

Which of the following is not used to extend LAN ?

Answer (Please select your correct option)

- Bridge
- Repeater
- Fiber modem
- Router

correct

Made By: Waqar Siddhu

Question No : 8 of 26 Marks: 1 (Budgeted Time 1 Min)

The working of connection-oriented service for networking is similar to the _____.

Answer (Please select your correct option)

- Ethernet
- Telephone

correct

- IP
- UDP

Made By: Waqar Siddhu

Question No : 9 of 26 Marks: 1 (Budgeted Time 1 Min)

_____ senses a signal on a cable and then transmits an amplified copy of the signal.

Answer (Please select your correct option)

- Repeater

correct

- Bridge
- Hub
- Transceiver

Made By: Waqar Siddhu

Question No : 10 of 26 Marks: 1 (Budgeted Time 1 Min)

Unlike Frame Relay and ATM, SMDS (Switched multi-megabit Data service) offers_____ .

Answer (Please select your correct option)

- Connectionless service paradigm

  correct

- Connection oriented service paradigm
- Both Connectionless and Connection-oriented service paradigm
- Stateless Connection oriented service paradigm

Made By: Waqar Siddhu

Question No : 11 of 26 Marks: 1 (Budgeted Time 1 Min)

A Bridge forwards or filters a frame by comparing the information in its address table to the frame's_____.

Answer (Please select your correct option)

- Layer 2 source address
- Layer 3 source address
- Layer 2 destination address

correct

- Layer 3 destination address

Made By: Waqar Siddhu

Question No : 12 of 26 Marks: 1 (Budgeted Time 1 Min)

ATM is designed to work on_____.

Answer (Please select your correct option)

- Twisted Pair
- Coaxial
- Radio Frequency
- Fiber

correct

Made By: Waqar Siddhu

Question No : 13 of 26 Marks: 1 (Budgeted Time 1 Min)

_____ identifies intermediate computers along a path to remote destination

Answer (Please select your correct option)

- Ping
- Traceroute

correct

- ICMP
- OSPF

Made By: Waqar Siddhu

Question No : 14 of 26 Marks: 1 (Budgeted Time 1 Min)

_____ computes shortest paths in a graph by using weights on edges as a measure of distance.

Answer (Please select your correct option)

- Greedy Algorithm
- Distance vector Algorithm
- Dijksta's algorithm

correct

- Binary Search Algorithm

Made By: Waqar Siddhu

Question No : 15 of 26 Marks: 1 (Budgeted Time 1 Min)

_____has no way to determine the cause of the problem.

Answer (Please select your correct option)

- ICMP
- ARP
- Ping

correct

- Traceroute

Made By: Waqar Siddhu

Question No : 16 of 26 Marks: 1 (Budgeted Time 1 Min)

A network that permits many sources to take turns accessing a shared communication resource is providing a form of _____.

Answer (Please select your correct option)

- Phase Division Multiplexing
- Time Division Multiplexing
- Frequency Division Multiplexing
- Wave Division Multiplexing

Made By: Waqar Siddhu

Question No : 17 of 26 Marks: 1 (Budgeted Time 1 Min)

No error detection scheme is perfect because transmission errors can affect _____.

Answer (Please select your correct option)

- Additional Information
- Additional information & data

correct

- Transmission medium
- Data

Made By: Waqar Siddhu

Question No : 18 of 26 Marks: 1 (Budgeted Time 1 Min)

Computers attached to an ethernet use _____ in which a computer waits for the Ether to be idle before transmitting a frame.

Answer (Please select your correct option)

- CSMA/CD

correct

- CSMA/CA
- Token Passing
- Round Robin

Made By: Waqar Siddhu

Question No : 19 of 26 Marks: 1 (Budgeted Time 1 Min)

Most WAN systems include a mechanism that can be used to eliminate the common case of duplication routing is called_____.

Answer (Please select your correct option)

- Dynamic route
- Hierarchal address
- Default route

correct

- Shortest path

Made By: Waqar Siddhu

Question No : 20 of 26 Marks: 1 (Budgeted Time 1 Min)

A typical port on an ATM switch operates at _____ or higher.

Answer (Please select your correct option)

- OC-2 speed (155Mbps)
- OC-3 speed (100Mbps)
- OC-3 speed (155Mbps)

correct

- OC-3 speed (155Gbps)

Made By: Waqar Siddhu

In _____, network occupies the smaller area like a room, a floor or a building.

Answer (Please select your correct option)

- LAN

  correct

- WAN
- MAN
- Wireless WAN

Made By: Waqar Siddhu

Start Time: 11:16 AM

In which type of network topology, computers are connected to a central device?

Answer (Please select your correct option)

- Ring

  correct

- Mesh
- Bus
- Star

Made By: Waqar Siddhu

Start Time: 11:16 AM

The term_____ refers to the general concept of a small block of data in a computer network.

Answer (Please select your correct option)

- Packet

correct

- Byte
- Cell
- Information

Made By: Waqar Siddhu

Start Time: 11:16 AM

_____ is the scheme, which is designed to help in detecting transmission errors by sending one extra bit of information with each character.

Answer (Please select your correct option)

- Parity checking

  correct

- Checksums
- CRC
- LRC

Made By: Waqar Siddhu

Start Time: 11:16 AM

_____ have advantages arisen from the size and ease of computation.

Answer (Please select your correct option)

- CRC
- Parity
- Checksums

correct

- VRC

Made By: Waqar Siddhu

Start Time: 11:16 AM

The Fast Ethernet hardware operates at a rate of _____.

Answer (Please select your correct option)

- 10 Mbps
- 100 Mbps

correct

- 1000 Mbps
- 1 Gbps

Made By: Waqar Siddhu

Start Time: 11:16 AM

The Gigabit Ethernet hardware operates at a rate of _____.

Answer (Please select your correct option)

- 10 Mbps
- 100 Mbps
- 1000 Mbps

correct

- 10 Gbps

Made By: Waqar Siddhu

Start Time: 11:16 AM

Wireless LAN uses _____ as a media access method.

Answer (Please select your correct option)

- CSMA/CD
- CSMA/CA

correct

- Token Passing
- CSMA

Made By: Waqar Siddhu

Start Time: 11:16 AM

The _____ relies on the hardware manufacturer to assign a unique physical address to each network interface.

Answer (Please select your correct option)

- Static addressing scheme

  correct

- Configurable addressing scheme
- Dynamic addressing scheme
- Dynamic Configurable addressing scheme

Made By: Waqar Siddhu

Start Time: 11:16 AM

IEEE LLC/SNAP header is consist of _____which is used to specify the type of data.

Answer (Please select your correct option)

- 8 octets

  correct

- 10 octets
- 12 bytes
- 16 bits

Made By: Waqar Siddhu

Start Time: 11:16 AM

Formally named _____ is informally known as the twisted pair Ethernet or TP Ethernet.

Answer (Please select your correct option)

- 10 Base 2
- 10 Base 5
- 10 Base T

correct

- 100 Base T

Made By: Waqar Siddhu

Start Time: 11:16 AM

_____ senses a signal on a cable and then transmits an amplified copy of the signal.

Answer (Please select your correct option)

- Bridge
- Hub
- Transceiver
- Repeater

correct

Made By: Waqar Siddhu

Start Time: 11:16 AM

Generally a Bridge is used to perform _____.

Answer (Please select your correct option)

- Extend a LAN, Filter and Forward a packet
- Routing
- Filter and Forward a frame

correct

- Filter and Forward a packet

Made By: Waqar Siddhu

Start Time: 11:16 AM

Which of the following is not used to extend LAN ?

Answer (Please select your correct option)

- Bridge
- Repeater
- Fiber modem
- HUB

correct

Made By: Waqar Siddhu

Start Time: 11:16 AM

If a bridge is unable to find _____ in its table then it just forwards frames to the other segment.

Answer (Please select your correct option)

- IP address
- Destination address
- Source address
- Port address

Made By: Waqar Siddhu

Start Time: 11:16 AM

Most WAN systems include a mechanism that can be used to eliminate the common case of duplication routing is called_____.

Answer (Please select your correct option)

- Dynamic route
- Hierarchal address
- Default route

correct

- Shortest path

Made By: Waqar Siddhu

Start Time: 11:16 AM

The working of connection-oriented service for networking is similar to the _____.

Answer (Please select your correct option)

- Ethernet
- Telephone

correct

- IP
- UDP

Made By: Waqar Siddhu

Start Time: 11:16 AM

ATM assigns each VC a _____ identifier which is divided into two parts to produce a hierarchy.

Answer (Please select your correct option)

- 23-bit
- 24-bit

correct

- 21-bit
- 22-bit

Made By: Waqar Siddhu

Start Time: 11:16 AM

_____ is used for delay sensitive applications requiring high data rate.

Answer (Please select your correct option)

- Constant Bit Rate (CBR) service

correct

- Variable Bit Rate (VBR) service
- Available Bit Rate (ABR) service
- Uniform Bit Rate (UBR) service

Made By: Waqar Siddhu

Start Time: 11:16 AM

Header of cell takes _____ of network capacity.

Answer (Please select your correct option)

- 5%
- 10%

correct

- 12%
- 15%

Made By: Waqar Siddhu

Start Time: 11:16 AM

Question No : 1 of 26 Marks: 1 (Budgeted Time 1 Min)

In broadcast topology there are two categories____.

Answer (Please select your correct option)

- Satellite/Radio and Ring

  correct

- Satellite/Radio and Star
- Ring and star
- Satellite/Radio

Made By: Waqar Siddhu

Question No : 2 of 26 Marks: 1 (Budgeted Time 1 Min)

In ----------, network occupies the smaller area like a room a floor or a building

Answer (Please select your correct option)

- LAN

correct

- WAN
- MAN
- PAN

Made By: Waqar Siddhu

Question No : 3 of 26 Marks: 1 (Budgeted Time 1 Min)

The Ethernet standard specifies that frames are sent using the --------

Answer (Please select your correct option)

- Manchester Encoding

  correct

- Nonreturn to zero(NRZ)
- Return to zero(RZ)
- Differential Manchester

Made By: Waqar Siddhu

Question No : 4 of 26 Marks: 1 (Budgeted Time 1 Min)

A ---------- relies on the hardware manufacturer to assign a unique physical address to each network interface.

Answer (Please select your correct option)

- Static addressing scheme

  correct

- Configurable addressing scheme
- Dynamic addressing scheme
- Burned MAC

Made By: Waqar Siddhu

Question No : 5 of 26 Marks: 1 (Budgeted Time 1 Min)

When an application---------- data, it makes a copy of the data available to all other computers on the network.

Answer (Please select your correct option)

- Broadcasting
- Multicasting

correct

- Unicasting
- Anycasting

Made By: Waqar Siddhu

Question No : 6 of 26 Marks: 1 (Budgeted Time 1 Min)

Formally named _____ informally known as the thick wire Ethernet or Thick net.

Answer (Please select your correct option)

- 10 Base 2
- 10 Base 5
- 10 Base T

correct

- 100 Base T

Made By: Waqar Siddhu

Question No : 7 of 26 Marks: 1 (Budgeted Time 1 Min)

Basic LAN technologies such as Ethernet, Token Ring, and FDDI use a _____.

Answer (Please select your correct option)

- Connectionless service paradigm
- Connection-oriented service paradigm

correct

- Both Connectionless and Connection-oriented service paradigm
- Connection-oriented service paradigm without acknowledgment

Made By: Waqar Siddhu

Question No : 8 of 26 Marks: 1 (Budgeted Time 1 Min)

In which type of topology computers are connected to a central device?

Answer (Please select your correct option)

- Ring

correct

- Mesh
- Bus
- Star

Made By: Waqar Siddhu

Question No : 9 of 26 Marks: 1 (Budgeted Time 1 Min)

---------- was especially most concerned about the lack of highly powered computers.

Answer (Please select your correct option)

- ARPA

  correct

- IEEE
- EIA
- Goverment

Made By: Waqar Siddhu

Question No : 10 of 26 Marks: 1 (Budgeted Time 1 Min)

"Frame type" field of the header consists of _____ bits.

Answer (Please select your correct option)

- 8
- 10
- 16
- 32

correct

Made By: Waqar Siddhu

Question No : 11 of 26 Marks: 1 (Budgeted Time 1 Min)

A bridge uses the _____ to determine which computers connect to which segment and uses the _____ to determine whether to forward a copy of frame.

Answer (Please select your correct option)

- Source address, Destination address

correct

- Destination address, Source address
- Destination address, MAC Address
- Destination address, Destination address

Made By: Waqar Siddhu

Question No : 12 of 26 Marks: 1 (Budgeted Time 1 Min)

Generally a Bridge is used to perform _____.

Answer (Please select your correct option)

- Extend a LAN, Filter and Forward a packet
- Routing
- Filter and Forward a frame

correct

- Filter and Forward a packet

Made By: Waqar Siddhu

Question No : 13 of 26 Marks: 1 (Budgeted Time 1 Min)

If bridge cannot find _____in its tables then forwards frames to the other segment.

Answer (Please select your correct option)

- IP address
- Destination address

correct

- Source address
- Port address

Made By: Waqar Siddhu

Question No : 14 of 26 Marks: 1 (Budgeted Time 1 Min)

_____ technology can support both LAN and WAN connections.

Answer (Please select your correct option)

- Frame relay
- Ethernet
- SMDS
- ATM

correct

Made By: Waqar Siddhu

Question No : 15 of 26 Marks: 1 (Budgeted Time 1 Min)

Virtual Circuit connection identifier occupies _____bits.

Answer (Please select your correct option)

- 16 correct
- 24
- 32
- 8

Made By: Waqar Siddhu

Question No : 16 of 26 Marks: 1 (Budgeted Time 1 Min)

_____ is used for ordinary data.

Answer (Please select your correct option)

- Available Bit Rate (ABR) service

correct

- Uniform Bit Rate (UBR) service
- Constant Bit Rate (CBR) service
- Variable Bit Rate (VBR) service

Made By: Waqar Siddhu

Question No : 17 of 26 Marks: 1 (Budgeted Time 1 Min)

Unlike Frame Relay and ATM, SMDS (Switched multi-megabit Data service) offers_____ .

Answer (Please select your correct option)

- Connectionless service paradigm
- Connection oriented service paradigm
- Both Connectionless and Connection-oriented service paradigm
- Stateless Connection oriented service paradigm

Made By: Waqar Siddhu

Question No : 18 of 26 Marks: 1 (Budgeted Time 1 Min)

The term_____ refers to the general concept of a small block of data in a network.

Answer (Please select your correct option)

- Packet

  correct

- Byte
- Cell
- Information

Made By: Waqar Siddhu

Question No : 19 of 26 Marks: 1 (Budgeted Time 1 Min)

LAN that uses ATM technology has a_____.

Answer (Please select your correct option)

- Star topology

  correct

- Bus topology
- Ring topology
- Mesh topology

Made By: Waqar Siddhu

Question No : 20 of 26 Marks: 1 (Budgeted Time 1 Min)

The next hop to which a packet is sent depends only on_____.

Answer (Please select your correct option)

- Packet's destination

  correct

- Packet's original source
- Path the packet has taken
- Routed Protocol

Made By: Waqar Siddhu

In _____, network occupies the smaller area like a room, a floor or a building.

Answer (Please select your correct option)

- LAN

  correct

- WAN
- MAN
- Wireless WAN

Made By: Waqar Siddhu

Start Time: 11:16 AM

In which type of network topology, computers are connected to a central device?

Answer (Please select your correct option)

- Ring

  correct

- Mesh
- Bus
- Star

Made By: Waqar Siddhu

Start Time: 11:16 AM

The term_____ refers to the general concept of a small block of data in a computer network.

Answer (Please select your correct option)

- Packet

correct

- Byte
- Cell
- Information

Made By: Waqar Siddhu

Start Time: 11:16 AM

_____ is the scheme, which is designed to help in detecting transmission errors by sending one extra bit of information with each character.

Answer (Please select your correct option)

- Parity checking

  correct

- Checksums
- CRC
- LRC

Made By: Waqar Siddhu

Start Time: 11:16 AM

_____ have advantages arisen from the size and ease of computation.

Answer (Please select your correct option)

- CRC
- Parity
- Checksums

correct

- VRC

Made By: Waqar Siddhu

Start Time: 11:16 AM

The Fast Ethernet hardware operates at a rate of _____.

Answer (Please select your correct option)

- 10 Mbps
- 100 Mbps

correct

- 1000 Mbps
- 1 Gbps

Made By: Waqar Siddhu

Start Time: 11:16 AM

The Gigabit Ethernet hardware operates at a rate of _____.

Answer (Please select your correct option)

- 10 Mbps
- 100 Mbps
- 1000 Mbps

correct

- 10 Gbps

Made By: Waqar Siddhu

Start Time: 11:16 AM

Wireless LAN uses _____ as a media access method.

Answer (Please select your correct option)

- CSMA/CD
- CSMA/CA

correct

- Token Passing
- CSMA

Made By: Waqar Siddhu

Start Time: 11:16 AM

The _____ relies on the hardware manufacturer to assign a unique physical address to each network interface.

Answer (Please select your correct option)

- Static addressing scheme

  correct

- Configurable addressing scheme
- Dynamic addressing scheme
- Dynamic Configurable addressing scheme

Made By: Waqar Siddhu

Start Time: 11:16 AM

IEEE LLC/SNAP header is consist of _____which is used to specify the type of data.

Answer (Please select your correct option)

- 8 octets

  correct

- 10 octets
- 12 bytes
- 16 bits

Made By: Waqar Siddhu

Start Time: 11:16 AM

Formally named _____ is informally known as the twisted pair Ethernet or TP Ethernet.

Answer (Please select your correct option)

- 10 Base 2
- 10 Base 5
- 10 Base T

correct

- 100 Base T

Made By: Waqar Siddhu

Start Time: 11:16 AM

_____ senses a signal on a cable and then transmits an amplified copy of the signal.

Answer (Please select your correct option)

- Bridge
- Hub
- Transceiver
- Repeater

correct

Made By: Waqar Siddhu

Start Time: 11:16 AM

Generally a Bridge is used to perform _____.

Answer (Please select your correct option)

- Extend a LAN, Filter and Forward a packet
- Routing
- Filter and Forward a frame

correct

- Filter and Forward a packet

Made By: Waqar Siddhu

Start Time: 11:16 AM

Which of the following is not used to extend LAN ?

Answer (Please select your correct option)

- Bridge
- Repeater
- Fiber modem
- HUB

correct

Made By: Waqar Siddhu

Start Time: 11:16 AM

If a bridge is unable to find _____ in its table then it just forwards frames to the other segment.

Answer (Please select your correct option)

- IP address
- Destination address
- Source address
- Port address

Made By: Waqar Siddhu

Start Time: 11:16 AM

Most WAN systems include a mechanism that can be used to eliminate the common case of duplication routing is called_____.

Answer (Please select your correct option)

- Dynamic route
- Hierarchal address
- Default route

correct

- Shortest path

Made By: Waqar Siddhu

Start Time: 11:16 AM

The working of connection-oriented service for networking is similar to the _____.

Answer (Please select your correct option)

- Ethernet
- Telephone

correct

- IP
- UDP

Made By: Waqar Siddhu

Start Time: 11:16 AM

ATM assigns each VC a _____ identifier which is divided into two parts to produce a hierarchy.

Answer (Please select your correct option)

- 23-bit
- 24-bit

correct

- 21-bit
- 22-bit

Made By: Waqar Siddhu

Start Time: 11:16 AM

_____ is used for delay sensitive applications requiring high data rate.

Answer (Please select your correct option)

- Constant Bit Rate (CBR) service

correct

- Variable Bit Rate (VBR) service
- Available Bit Rate (ABR) service
- Uniform Bit Rate (UBR) service

Made By: Waqar Siddhu

Start Time: 11:16 AM

Header of cell takes _____ of network capacity.

Answer (Please select your correct option)

- 5%
- 10%

correct

- 12%
- 15%

Made By: Waqar Siddhu

Start Time: 11:16 AM

Question No : 1 of 26 Marks: 1 (Budgeted Time 1 Min)

ATM was designed for _____ and use a_____

Answer (Please select your correct option)

- LANs, Connectionless service paradigm
- WANs, Connectionless service paradigm
- Both LANs and WANs, Connectionless service paradigm
- Both LANs and WANs, Connection-oriented service paradigm

correct

Made By: Waqar Siddhu

Question No : 2 of 26 Marks: 1 (Budgeted Time 1 Min)

In Point-to-Point type of topologies there are two topologies _____.

Answer (Please select your correct option)

- Tree and Ring
- Star and Ring
- Star and Tree

correct

- Bus and Mesh

Made By: Waqar Siddhu

Question No : 3 of 26 Marks: 1 (Budgeted Time 1 Min)

In ---------, network occupies larger areas like cities & countries.

Answer (Please select your correct option)

- LAN
- WAN

correct

- MAN
- CAN

Made By: Waqar Siddhu

Question No : 4 of 26 Marks: 1 (Budgeted Time 1 Min)

Hardware that calculates a CRC uses two simple components.

Answer (Please select your correct option)

- AND unit with XOR unit
- Shift register with XOR unit

correct

- Shift register with AND unit
- Shift register with shift XOR unit

Made By: Waqar Siddhu

Question No : 5 of 26 Marks: 1 (Budgeted Time 1 Min)

A network that uses a ------ usually consist of a single long cable to which computers attach.

Answer (Please select your correct option)

- Star Topology
- Ring Topology
- Bus Topology

correct

- Tree Topology

Made By: Waqar Siddhu

Question No : 6 of 26 Marks: 1 (Budgeted Time 1 Min)

A ---------- provides mechanism that a customer can use to set a physical address.

Answer (Please select your correct option)

- Static addressing scheme
- Configurable addressing scheme

correct

- Dynamic addressing scheme
- Masking

Made By: Waqar Siddhu

Question No : 7 of 26 Marks: 1 (Budgeted Time 1 Min)

Formally named _____ informally known as the thick wire Ethernet or Thick net.

Answer (Please select your correct option)

- 10 Base 2
- 10 Base 5
- 10 Base T

correct

- 100 Base T

Made By: Waqar Siddhu

Question No : 8 of 26 Marks: 1 (Budgeted Time 1 Min)

Preamble field in Ethernet frame consist of _____bits.

Answer (Please select your correct option)

- 8
- 32 correct
- 48
- 64

Made By: Waqar Siddhu

Question No : 9 of 26 Marks: 1 (Budgeted Time 1 Min)

A bridge functions in the _____ layer(s).

Answer (Please select your correct option)

- Physical

correct

- Data link
- Network and Data link
- Physical and Data link

Made By: Waqar Siddhu

Question No : 10 of 26 Marks: 1 (Budgeted Time 1 Min)

Generally a Bridge is used to perform _____.

Answer (Please select your correct option)

- Extend a LAN, Filter and Forward a packet
- Routing
- Filter and Forward a frame

correct

- Filter and Forward a packet

Made By: Waqar Siddhu

Question No : 11 of 26 Marks: 1 (Budgeted Time 1 Min)

_____ technology can support both LAN and WAN connections.

Answer (Please select your correct option)

- Frame relay
- Ethernet
- SMDS
- ATM

correct

Made By: Waqar Siddhu

Question No : 12 of 26 Marks: 1 (Budgeted Time 1 Min)

One repeater _____, two repeaters _____ the maximum cable length limitation.

Answer (Please select your correct option)

- Square root, Cube root
- Double, Triple

correct

- Triple, Quad
- Double, Quad

Made By: Waqar Siddhu

Question No : 13 of 26 Marks: 1 (Budgeted Time 1 Min)

_____is used for compressed audio and video where the data rate is related to level of compression.

Answer (Please select your correct option)

- Constant Bit Rate (CBR) service
- Variable Bit Rate (VBR) service

correct

- Available Bit Rate (ABR) service
- Uniform Bit Rate (UBR) service

Made By: Waqar Siddhu

Question No : 14 of 26 Marks: 1 (Budgeted Time 1 Min)

_____ is used for ordinary data.

Answer (Please select your correct option)

- Available Bit Rate (ABR) service

correct

- Uniform Bit Rate (UBR) service
- Constant Bit Rate (CBR) service
- Variable Bit Rate (VBR) service

Made By: Waqar Siddhu

Question No : 15 of 26 Marks: 1 (Budgeted Time 1 Min)

_____ sends a message to a remote computer and reports whether the computer responds.

Answer (Please select your correct option)

- Telnet
- Ping
  Ping
  correct
- Traceroute
- ICMP

Made By: Waqar Siddhu

Question No : 16 of 26 Marks: 1 (Budgeted Time 1 Min)

A network with throughput T and delay D would have a total no of _____ bits in transit at any time.

Answer (Please select your correct option)

- T + D
- T x D/Unit Time
- T / D
- T x D

correct

Made By: Waqar Siddhu

Question No : 17 of 26 Marks: 1 (Budgeted Time 1 Min)

A network that permits many sources to take turns accessing a shared communication resource is providing a form of _____.

Answer (Please select your correct option)

- Phase Division Multiplexing
- Time Division Multiplexing
- Frequency Division Multiplexing
- Wave Division Multiplexing

Made By: Waqar Siddhu

Question No : 18 of 26 Marks: 1 (Budgeted Time 1 Min)

A network which is based on packets uses a computer which may have _____, memory and_____ for switching.

Answer (Please select your correct option)

- Administration Rights, Algorithm
- Source address, Destination address
- Interface, Program
- Input, Output

Made By: Waqar Siddhu

Question No : 19 of 26 Marks: 1 (Budgeted Time 1 Min)

In direct point to point communication adding the Nth computer requires_____ new connections.

Answer (Please select your correct option)

- N(N - 1)
- N^2
- N - 1
- $(N^2 - N)/2$

correct

Made By: Waqar Siddhu

Question No : 20 of 26 Marks: 1 (Budgeted Time 1 Min)

Computers attached to an ethernet use _____ in which a computer waits for the Ether to be idle before transmitting a frame.

Answer (Please select your correct option)

- CSMA/CD

correct

- CSMA/CA
- Token Passing
- Round Robin

Made By: Waqar Siddhu

Question No : 1 of 26 Marks: 1 (Budgeted Time 1 Min)

In broadcast topology there are two categories____.

Answer (Please select your correct option)

- Satellite/Radio and Ring

  correct

- Satellite/Radio and Star
- Ring and star
- Satellite/Radio

Made By: Waqar Siddhu

Question No : 2 of 26 Marks: 1 (Budgeted Time 1 Min)

In ----------, network occupies the smaller area like a room a floor or a building

Answer (Please select your correct option)

- LAN

correct

- WAN
- MAN
- PAN

Made By: Waqar Siddhu

Question No : 3 of 26 Marks: 1 (Budgeted Time 1 Min)

The Ethernet standard specifies that frames are sent using the --------

Answer (Please select your correct option)

- Manchester Encoding

  correct

- Nonreturn to zero(NRZ)
- Return to zero(RZ)
- Differential Manchester

Made By: Waqar Siddhu

Question No : 4 of 26 Marks: 1 (Budgeted Time 1 Min)

A ---------- relies on the hardware manufacturer to assign a unique physical address to each network interface.

Answer (Please select your correct option)

- Static addressing scheme

  correct

- Configurable addressing scheme
- Dynamic addressing scheme
- Burned MAC

Made By: Waqar Siddhu

Question No : 5 of 26 Marks: 1 (Budgeted Time 1 Min)

When an application---------- data, it makes a copy of the data available to all other computers on the network.

Answer (Please select your correct option)

- Broadcasting
- Multicasting

correct

- Unicasting
- Anycasting

Made By: Waqar Siddhu

Question No : 6 of 26 Marks: 1 (Budgeted Time 1 Min)

Formally named _____ informally known as the thick wire Ethernet or Thick net.

Answer (Please select your correct option)

- 10 Base 2
- 10 Base 5
- 10 Base T

correct

- 100 Base T

Made By: Waqar Siddhu

Question No : 7 of 26 Marks: 1 (Budgeted Time 1 Min)

Basic LAN technologies such as Ethernet, Token Ring, and FDDI use a _____.

Answer (Please select your correct option)

- Connectionless service paradigm
- Connection-oriented service paradigm

correct

- Both Connectionless and Connection-oriented service paradigm
- Connection-oriented service paradigm without acknowledgment

Made By: Waqar Siddhu

Question No : 8 of 26 Marks: 1 (Budgeted Time 1 Min)

In which type of topology computers are connected to a central device?

Answer (Please select your correct option)

- Ring

correct

- Mesh
- Bus
- Star

Made By: Waqar Siddhu

Question No : 9 of 26 Marks: 1 (Budgeted Time 1 Min)

---------- was especially most concerned about the lack of highly powered computers.

Answer (Please select your correct option)

- ARPA

  correct

- IEEE
- EIA
- Goverment

Made By: Waqar Siddhu

Question No : 10 of 26 Marks: 1 (Budgeted Time 1 Min)

"Frame type" field of the header consists of _____ bits.

Answer (Please select your correct option)

- 8
- 10
- 16
- 32

correct

Made By: Waqar Siddhu

Question No : 11 of 26 Marks: 1 (Budgeted Time 1 Min)

A bridge uses the _____ to determine which computers connect to which segment and uses the _____ to determine whether to forward a copy of frame.

Answer (Please select your correct option)

- Source address, Destination address

correct

- Destination address, Source address
- Destination address, MAC Address
- Destination address, Destination address

Made By: Waqar Siddhu

Question No : 12 of 26 Marks: 1 (Budgeted Time 1 Min)

Generally a Bridge is used to perform _____.

Answer (Please select your correct option)

- Extend a LAN, Filter and Forward a packet
- Routing
- Filter and Forward a frame

correct

- Filter and Forward a packet

Made By: Waqar Siddhu

Question No : 13 of 26 Marks: 1 (Budgeted Time 1 Min)

If bridge cannot find _____in its tables then forwards frames to the other segment.

Answer (Please select your correct option)

- IP address
- Destination address

correct

- Source address
- Port address

Made By: Waqar Siddhu

Question No : 14 of 26 Marks: 1 (Budgeted Time 1 Min)

_____ technology can support both LAN and WAN connections.

Answer (Please select your correct option)

- Frame relay
- Ethernet
- SMDS
- ATM

correct

Made By: Waqar Siddhu

Question No : 15 of 26 Marks: 1 (Budgeted Time 1 Min)

Virtual Circuit connection identifier occupies _____bits.

Answer (Please select your correct option)

- 16 correct
- 24
- 32
- 8

Made By: Waqar Siddhu

Question No : 16 of 26 Marks: 1 (Budgeted Time 1 Min)

_____ is used for ordinary data.

Answer (Please select your correct option)

- Available Bit Rate (ABR) service

correct

- Uniform Bit Rate (UBR) service
- Constant Bit Rate (CBR) service
- Variable Bit Rate (VBR) service

Made By: Waqar Siddhu

Question No : 17 of 26 Marks: 1 (Budgeted Time 1 Min)

Unlike Frame Relay and ATM, SMDS (Switched multi-megabit Data service) offers_____ .

Answer (Please select your correct option)

- Connectionless service paradigm
- Connection oriented service paradigm
- Both Connectionless and Connection-oriented service paradigm
- Stateless Connection oriented service paradigm

Made By: Waqar Siddhu

Question No : 18 of 26 Marks: 1 (Budgeted Time 1 Min)

The term_____ refers to the general concept of a small block of data in a network.

Answer (Please select your correct option)

- Packet

  correct

- Byte
- Cell
- Information

Made By: Waqar Siddhu

Question No : 19 of 26 Marks: 1 (Budgeted Time 1 Min)

LAN that uses ATM technology has a_____.

Answer (Please select your correct option)

- Star topology

  correct

- Bus topology
- Ring topology
- Mesh topology

Made By: Waqar Siddhu

Question No : 20 of 26 Marks: 1 (Budgeted Time 1 Min)

The next hop to which a packet is sent depends only on_____.

Answer (Please select your correct option)

- Packet's destination

  correct

- Packet's original source
- Path the packet has taken
- Routed Protocol

Made By: Waqar Siddhu

CS610- Computer Network
Midterm Examination - Fall 2011

1. Where are destination and source address located in frame? (2 marks)
Answer:- (Page 56)
The packet header includes destination and source addresses.

2. If 100mbps Ethernet NIC is connected to a hub which supports 10mbps, what will be the data rate in this scenario? (2 marks)
Answer:-
This has two consequences. First, the hub does not necessarily create a broadcast medium. Second, there are no collisions between traffic on 10 Mbps ports and 100 Mbps ports.

3. In connection oriented network, which type of connection identifier is used? Support your answer with example. (2 marks)
Answer:- (Page 66)
ATM uses the concept of connection-oriented networking.

4. Imagine a network of 6 devices A, B, C, D, E and F. All devices are on same packet switch. If computer A wants to send packet to computer E, How would packet switch forward this packet? (3 marks)
Answer:-
path between switch A and F and the total distance traveled along this path
switch A – switch D – switch E
distance = 4

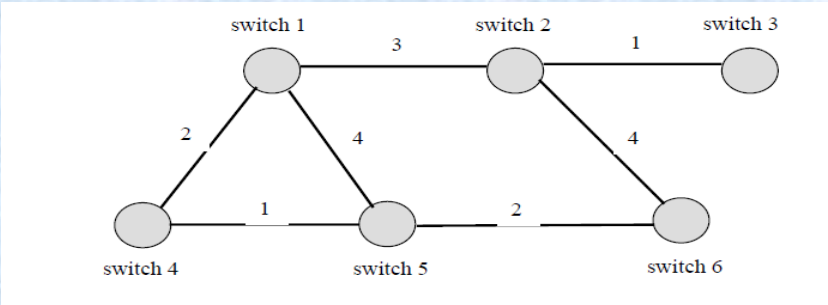

Muhammad Moaaz Siddiq MCS (3rd)
mc100401285@Gmail.com
Campus:- Institute of E-Learning & Modern Studies (IEMS) Samundari

5. Network administrator needs audio and video service for his network. He has to send or receive data at same data rate. Which type of ATM quality service specification would be applied there? Give example? (3 marks)

Answer:-

To facilitate the transport of audio and video data across emerging Asynchronous Transfer Mode (ATM) networks, a simple, low cost, audio/video ATM appliance, the AVATAR, has been developed. This appliance is capable of handling uncompressed bidirectional audio and NTSC video connections.

6. We have two satellite locations, at first location one bridge is configured and at second location 2 bridges are configured. Which location performed will be faster? Give reason. (3 marks)

Answer:- **Click here for detail**

Satellite locations with two bridges configured will performed faster. The brigade also had to provide power to virtually all of its East Timor assets. Setting up the satellite system, for example, required supplying power to both the communications station and the users' computers. A bridge that has multiple ports is known as a networking switch. Both bridges and switches are capable of directing traffic to specific network addresses instead of broadcasting the data to all devices on a network segment. This functionality makes the bridge or switches a more advanced networking device over a hub or repeater.

7. There are two sites office A & B, both are using VPN. If a user of another network wants to send some packet to A, then what will be the behavior of network A? How data is protected in VPN environment? (05 marks)

Answer:- **Click here for detail**

In theory when a machine on private network A wants to send a packet to a machine on private network B the packet is accepted by the VPN server. It is then encrypted and encapsulated within a standard IP packet that has a destination address corresponding to the VPN server at network B.

Notice that both VPN servers have to have to be "on the Internet" in the sense of having publicly accessible IP addresses. When the packet arrives at network B's VPN server it extracts the encapsulated private packet, decrypts it and sends it on its way within the local network. The machines within network A and B don't have to have publicly accessible address - that is they don't have to be on the public Internet. This way of using the public Internet to connect two machines that are not on the public internet is another advantage of the VPN approach.

As far as users of network A and B are concerned the VPN is as good as a dedicated physical connection. The idea of using public data packets to transfer embedded private data packets is often called "tunnelling" because it seems to create a data tunnel between the two networks.

.

Muhammad Moaaz Siddiq MCS (3rd)
mc100401285@Gmail.com
Campus:- Institute of E-Learning & Modern Studies (IEMS) Samundari

CS610- Computer Network
Midterm Examination - Fall 2011

1. We have two satellite locations. At first location one bridge is configured and at 2nd location twi bridges are configured. Which location's performance will be faster. Give reasons to support your answer. (5 marks)
Answer:- rep

2. Star Textile has huge network of systems and switches. A task is given to IT Officer that if some link goes the entire network works smoothly. Which routing method will be use? 5 marks
Answer:- Click here for detail
Distributed routing method is better for this purpose because Distributed routing relies on each node to compute its own routing table and build the required connections with its neighbors. Ideally, the network operation, status, and architecture of each node is transparent. Distributed routing is more flexible than centralized routing because each node handles its own routing. The result is often improved system performance.

3. Six devices are connected in network A,B,C,D,E and F. All devices are on same packet switch. Computer A wants to send packet to E. How will packet switch forwards the packet? 3 marks
Answer:- rep

4. Network administrator wants to build a tunnel between sites offices. How will he build using private virtual network? 3 marks
Answer:- Click here for detail
To establishes a private network that can send data securely between these two locations or networks through a "tunnel." A VPN tunnel connects the two PCs or networks and allows data to be transmitted over the Internet as if it were still within those networks.

5. Who examine performance of network? 2 marks
Answer:- Click here for detail
Performance is probably the most closely monitored operational feature by users in the network environment

6. How can we compute shortest path in WAN? 2 marks
Answer:- (Page 62)
We use Djikstra's algorithm to compute shortest path from each node to every other node.

7. 100mbps Ethernet NIC is connected to control Hub which supports 10mbps. What will be Data Rate in this scenario? 2 marks

Muhammad Moaaz Siddiq MCS (3rd)
mc100401285@Gmail.com
Campus:- Institute of E-Learning & Modern Studies (IEMS) Samundari

CS610- Computer Network
Midterm Examination – Fall 2011

There are two sites office A & B, both are using VPN. If a user of another network wants to send some packet to A, then what will be the behavior of network A?
Answer:- rep

How data is protected in VPN environment? (05 marks)
Answer:- rep

What type of switching technique is used in WAN?
Answer:- (Page 55)
WANs can use circuit-switching or packet-switching techniques. To span long distances or many computers, networks must replace shared medium with packet switches. Each switch moves an entire packet from one connection to another. That's why they are called packet switches.

write the names of identifiers used in ATM.(2)

What type of topology used in Ethernet? (2).
Answer:- Click here for detail
Traditional Ethernet employs a bus topology, meaning that all devices or hosts on the network use the same shared communication line.

CS610- Computer Network
Midterm Examination – Fall 2011

Difference between LAN and WAN 2 marks
Answer:- (Page 4)
In LAN network occupies the smaller area like a room a floor or a building.
In WAN, network occupies larger areas like cities & countries. Internet is a Wide Area Network.

Why fiber need fir ATM 3 marks

define bridge 3 marks
Answer:- (Page 50)
A bridge is a hardware device also used to connect two LAN segments to extend a LAN. A typical bridge has two NICs, a CPU a memory and a ROM. It only runs the code stored in its ROM.

ambiguity may cause the failure of any network, how parity bit check is consider in this situation 5 marks
define default route how it is different from routing 5 marks

Muhammad Moaaz Siddiq MCS (3rd)
mc100401285@Gmail.com
Campus:- Institute of E-Learning & Modern Studies (IEMS) Samundari

CS610- Computer Network
Midterm Examination - Spring 2011

Question: Defines simplex and full duplex connection? Marks 2
Answer:- (Page 76)
Some connection-oriented technologies provide full duplex while other allow on simplex connection. To communicate using a simplex design a pair of computers must establish two connections one from computer A to computer B and another from computer B to A.

Question: How WAN capable to handle many computers? Marks 2
Answer:- **Click here for detail**
A Wide Area Network (WAN) is a telecommunication network that covers a broad area.

Question: Briefly explains the working structure of thick Ethernet. Marks 2
Answer:- (Page 41)
It uses thick coax cable. AUI cable (or transceiver or drop cable) connects from NIC to transceiver. AUI cable carries digital signal from NIC to transceiver. The transceiver generates analog signal on coax cable. The wires in AUI carry digital signals power and other control signals. Thick Ethernet also requires terminators to avoid signal reflectance.

Question: Imagines a network for six devices: A, B, C, D, E and F. all devices are on a same packet switch. Computer A want to send packet to computer E. how would packet switch forward this packet? Marks 3
Answer:- rep

Question: Does ATM eliminate the varying delay times associated with different sized packets? If yes then give reason. Marks 2

Question: Why ATM design chose cells over packet? Marks 5
Answer:- (Page 72)
• Cells are not variable length and memory management for them is simpler. Handling variable length packets leads to memory fragmentation.
• Variable length packets require hardware to accommodate the largest possible packet, and thus to detect the end of the packet. With cells bits can just be counted as they arrive.
• The length of time required to send a variable length packet is variable and requires complicated interrupt scheme to detect completion of transmission. QoS can't be guaranteed with variable length packets as easily as it can with fixed length cells.

Question: Reception is a process of CPU; describe it in a few lines? Marks 5

Muhammad Moaaz Siddiq MCS (3rd)
mc100401285@Gmail.com
Campus:- Institute of E-Learning & Modern Studies (IEMS) Samundari

CS610- Computer Network
Midterm Examination - Spring 2011

What is 10base T?
Answer:- **Click here for detail**
One of several adaptations of the Ethernet (IEEE 802.3) standard for Local Area Networks (LANs). The 10Base-T standard (also called Twisted Pair Ethernet) uses a twisted-pair cable with maximum lengths of 100 meters.

What is Multicasting?
Answer:- (Page 35)
It works like broadcasting however it does not forward frames automatically to the CPU.
The interface hardware is programmed in advance to accept certain frames that have multicast address as the destination address.

What is FDDI?
Answer:- (Page 31)
Fiber distributed data interconnect (FDDI) is another ring technology. Its most important features are:

- It uses fiber optics between stations and transmits data at 100Mbps.
- It uses pair of fibers to form two concentric rings.

Define 802.11 Wireless lans and CSMA?
Answer:- (Page 29)
IEEE 802.11 is standard wireless LAN that uses radio signals at 2.4GHz. Its data rate is 11Mbps. The older devices use radio signals at 900MHz and data rate of 2Mbps. Bluetooth specifies a wireless LAN for short distances. It uses shared medium and radio waves instead of coaxial cable.

CS610- Computer Network
Midterm Examination - Spring 2011

Define static and dynamic routing.(2)
Answer:- **Click here for detail**
Static Routing:-
Static routing is the simplest form of routing, but it is a manual process.

Dynamic Routing:-
Dynamic routing protocols are supported by software applications running on the routing device (the router) which dynamically learn network destinations and how to get to them and also advertise those destinations to other routers.

Muhammad Moaaz Siddiq MCS (3rd)
mc100401285@Gmail.com
Campus:- Institute of E-Learning & Modern Studies (IEMS) Samundari

Dijkart's Algorithm 2 Marks
Answer:- rep

write note on Bridges 5 Marks
Answer:- rep

Disadvantages of Repeaters 3 Marks
Answer:- (Page 50)
Repeaters do not recognize frame formats, they just amplify and retransmit the electrical signal. If a collision or error occurs in one segment, repeaters amplify and retransmit also the error onto the other segments.

Different b/w Cells and Packets 5 Marks
Answer:- (Page 72)
ATM designers chose cells over packets because of the following reasons:
• Cells are not variable length and memory management for them is simpler. Handling variable length packets leads to memory fragmentation.
• Variable length packets require hardware to accommodate the largest possible packet, and thus to detect the end of the packet. With cells bits can just be counted as they arrive.
• The length of time required to send a variable length packet is variable and requires complicated interrupt scheme to detect completion of transmission. QoS can't be guaranteed with variable length packets as easily as it can with fixed length cells.

CS610- Computer Network
Midterm Examination – Fall 2010

21.What is the difference between the physical and logical topologies?(2)
Answer:-
Physical Topology:
The way that the workstations are connected to the network through the actual cables that transmit data -- the physical structure of the network -- is called the physical topology. It depends on the wiring scheme.
Logical Topology:
The logical topology, in contrast, is the way that the signals act on the network media, or the way that the data passes through the network from one device to the next without regard to the physical interconnection of the devices. We can say that it is defined by the specific network technology.

22. Define static and dynamic routing.(2)
Answer:- rep

23. What is meant by Bridges STARTUP and STEADY State?(3)
Answer:- (Page 51)
When a bridge first boots the address lists are empty (start up state). The bridge forwards frames to the other segment if it can not find its destination address in its lists.

Muhammad Moaaz Siddiq MCS (3rd)
mc100401285@Gmail.com
Campus:- Institute of E-Learning & Modern Studies
(IEMS) Samundari

After some time when the bridge has received at least one frame from every computer, it has the lists built (steady state) it forwards frames as far it is necessary.

24. How can Switched Virtual Network be established?(3)
Answer:- (Page 70)
ESTABLISHING AN SVC:
The computer sends a connection request to the switch to which it is attached. Software in the switch finds a network path to the destination and sends along the connection request.

Each pair of switches in the path communicates to choose a VPI/VCI for their tables. Once the connection is established by the destination, a message is sent back to the originating computer to indicate the SVC is ready.

If any switch or the destination computer does not agree to setting up the VC, an error message is sent back and the SVC is not established

25. What is the concept of packet switches?(5)
Answer:- (Page 55)
To span long distances or many computers, networks must replace shared medium with packet switches. Each switch moves an entire packet from one connection to another. That's why they are called packet switches. A packet switch consists of a small computer with network interfaces, a memory and a program dedicated to packet switching function.

26. Write a note on Weight Graph.(5)
Answer:- (Page 62)
Djikstra's algorithm can accommodate weights on edges in graph. The shortest path is then the path with lowest total weight (sum of the weight with all edges). It should be noted that the shortest path is not necessarily with fewest edges (or hops). For example as shown in the figure below:

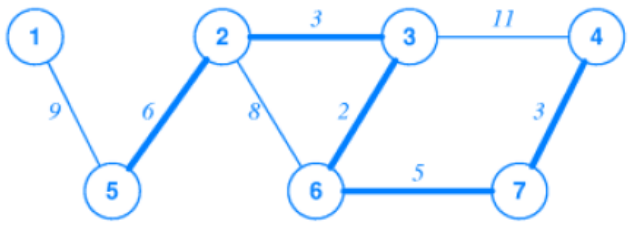

The shortest path in the figure from node 2 to node 6 is 2 to 3 and 3 to 6 as this path has the smallest weight so it is the shortest path.

Muhammad Moaaz Siddiq MCS (3rd)
mc100401285@Gmail.com
Campus:- Institute of E-Learning & Modern Studies (IEMS) Samundari

Question No: 21 (M a r k s: 2)
What is the difference between the physical and logical topologies?
Answer:- rep

Question No: 22 (M a r k s: 2)
Define Vector-Distance Algorithm.
Answer:- (Page 155)
Packet switches wait for next update message and they iterate through entries in message. If entry has shortest path to destination, insert source as next hop to destination and record distance as distance from next hop to destination plus distance from this switch to next hop.

Question No: 23 (M a r k s: 3)
What is the concept of store and forward technology?
Answer:- (Page 56)
STORE AND FORWARD:
Data delivery from one computer to another is accomplished through store and forward technology. In this technology packet switch stores incoming packet and also forwards that packet to another switch or computer. For this purpose packet switch has internal memory into which it can hold packet if outgoing connection is busy. Packets for each connection held on queue

Question No: 24 (M a r k s: 3)
How can Switched Virtual Network be established?
Answer:- rep

Question No: 25 (M a r k s: 5)
How can a bridge know whether to forward frames?
Answer:- (Page 53)
The bridges configure themselves automatically to decide which bridge will forward broadcast frames and which bridge will not.
The bridges communicate with each other on the network and use Distributed Spanning Tree (DST) algorithm to decide which bridge will not forward frames if a cycle occurs.

Muhammad Moaaz Siddiq MCS (3rd)
mc100401285@Gmail.com
Campus:- Institute of E-Learning & Modern Studies
(IEMS) Samundari

Question No: 26 (M a r k s: 5)
Compare connection oriented and connectionless Service.
Answer:- **Click here for detail**

- In connection-oriented protocol, authentication is needed while this is not case in connectionless protocol.
- In connection-oriented protocol, we have to establish connection between sender and receiver while this is not case in connectionless protocol.
- Example of connection-oriented protocol is TCP and the example of connectionless protocol is UDP,Internet.
- TCP is a connection-oriented protocol, it makes a connection and checks whether the data is received, and resends if it is not. UDP is a connectionless protocol, it does not guarantee delivery by first connecting and checking whether data is received.

CS610- Computer Network
Midterm Examination - Spring 2010

Question No: 21 (Marks: 2)
What is the difference between LAN and WAN?
Answer:- rep

Question No: 22 (Marks: 2)
Define the term Jitter.
Answer:- rep

Question No: 23 (Marks: 3)
Give a comparison of wiring Schemes.
Answer:- (Page 44)
The wiring schemes are compared as follows:

Separate transceiver allows computers to be powered off or disconnected from network without disrupting other communication.
Transceiver may be located in an inconvenient place, so finely malfunction transceiver can be hard.

In other case, thin coax cable takes minimum of cable. Disconnecting one computer (on one loose connection) can disrupt entire network.
Hub wiring centralizes electronics and connections. It makes management easier. Bottom line 10Base-T is most popular because of lowest cost.

Question No: 24 (Marks: 3)
How can Switched Virtual Network be established?
Answer:- rep

Muhammad Moaaz Siddiq MCS (3rd)
mc100401285@Gmail.com
Campus:- Institute of E-Learning & Modern Studies
(IEMS) Samundari

Question No: 25 (Marks: 5)
Describe permanent virtual circuits (PVC).
Answer:- (Page 69)
ATM can provide customers with virtual circuits that look like traditional leased digital circuits. Such permanent virtual circuits (PVC) last as long as the customer pay the periodic fee for its use. The forwarding tables are automatically restored after power of equipment failure. The forwarding table entries for such permanent VC's are statically configured, the terms used by Telco's for this is provisioning.

Provisioning requires two steps:
1. To determine a complete path (that is, identify the switches that will be used).
2. To choose appropriate VPI/VCI for each step in the path, and configure each adjacent pair of switches (easy, since each switch rewrites the VCI/VPI).

Question No: 26 (Marks: 5)
What are default routes draw the table.
Answer:- (Page 60)
Routing table entries can be collapsed with a default route. If the destination does not have in explicit routing table entry, then it uses a default route. Default routes for 4 nodes are shown in the figure below.

destin-ation	next hop
1	-
*	(1,3)

node 1

destin-ation	next hop
2	-
4	(2,4)
*	(2,3)

node 2

destin-ation	next hop
1	(3,1)
2	(3,2)
3	-
4	(3,4)

node 3

destin-ation	next hop
2	(4,2)
4	-
*	(4,3)

node 4

Muhammad Moaaz Siddiq MCS (3rd)
mc100401285@Gmail.com
Campus:- Institute of E-Learning & Modern Studies (IEMS) Samundari

DOWNLOAD MIDTERM

PAST PAPERS BY WAQAR SIDDHU

More in PDF From

VU Answer

Get All Solutions.

Question No : 21 of 26 Marks: 2 (Budgeted Time 4 Min)

A local telephone company wants to connect the LANs in all its offices throughout a city. For this case which network category would be used?

Answer (Please click here to Add Answer)

Made By: Waqar Siddhu

Question No : 22 of 26 Marks: 2 (Budgeted Time 4 Min)

As you know ATM network specifies a 24 bits VPI/VCI connection identifier, how many bits VPI and VCI occupies individually?

Answer (Please click here to Add Answer)

Normal Arial 12 100%

Made By: Waqar Siddhu

Question No : 23 of 26 Marks: 3 (Budgeted Time 6 Min)

ATM provides the best support for multiple services. Due to which reasons ATM is not adopted as a single underline technology? Give any three reasons to justify your answer.

Answer (Please click here to Add Answer)

Normal Arial 12 100%

Made By: Waqar Siddhu

Question No : 24 of 26 Marks: 3 (Budgeted Time 6 Min)

Is it necessary to use terminator at both ends of thin Ethernet cable? Give your answer with at least two reasons.

Answer (Please click here to Add Answer)

100%

Normal Arial 12

Made By: Waqar Siddhu

Question No : 25 of 26 Marks: 5 (Budgeted Time 10 Min)

Suppose, as a Network Administrator of XYZ organization you are given a task to develop a network in a limited area with low cost, then which wiring scheme will you use? Justify your answer with four solid reasons.

Answer (Please click here to Add Answer)

Normal Arial 12 100%

Made By: Waqar Siddhu

Question No : 26 of 26 Marks: 5 (Budgeted Time 10 Min)

Suppose there are two networks A and B both using virtual private network. If a user of some another network other than the network B wants to send some packets to a device in network A, then what will be the behavior of network A? Give three reasons behind its behavior.

Answer (Please click here to Add Answer)

Normal Arial 12 100%

Made By: Waqar Siddhu

Question No : 21 of 26 Marks: 2 (Budgeted Time 4 Min)

Suppose XYZ organization is using hierarchal addressing scheme in routing tables. Write any two advantages of using this scheme of addressing.

Answer (Please click here to Add Answer)

Normal Arial 12 100%

Made By: Waqar Siddhu

Question No : 22 of 26 Marks: 2 (Budgeted Time 4 Min)

Suppose ABC Corporation has a small number of packet switches and computer systems in its computer network. If entire network is stable with single network link than which routing method will be most appropriate for this scenario?

Answer (Please click here to Add Answer)

Normal Arial 12 100%

Made By: Waqar Siddhu

Question No : 23 of 26 Marks: 3 (Budgeted Time 6 Min)

Suppose in university campus, bridges are used in its local area network. Explain all steps, how bridge builds up addresses list table of all attached computers?

Answer (Please click here to Add Answer)

Normal Arial 12 100%

Made By: Waqar Siddhu

Question No : 24 of 26 Marks: 3 (Budgeted Time 6 Min)

Suppose you are a Network Engineer in an ISP which is providing different technological services like one of these may be cell based network. Here, as a Network Engineer you must know that which term is used to refer the "information" related to the network but not refers to the "information" that only uses the network". Give the name of this term and the reserved values it uses.

Answer (Please click here to Add Answer)

Normal Arial 12 100%

Made By: Waqar Siddhu

Question No : 25 of 26 Marks: 5 (Budgeted Time 10 Min)

A network sends and receives bits faster than computer's CPU. Explain how a computer attached to a network can handle this speed difference? Does the CPU have any role in handling it?

Answer (Please click here to Add Answer)

Normal Arial 12 100%

Made By: Waqar Siddhu

Question No : 26 of 26 Marks: 5 (Budgeted Time 10 Min)

Star textile has multiple LANs with packet switches. It is critical that if some link goes down/breakup the entire network traffic should arrive to respective destination smoothly. So, which method will meet this requirement? Give at least three reasons to support your answer.

Answer (Please click here to Add Answer)

Normal Arial 12 100%

Made By: Waqar Siddhu

Question No : 21 of 26 Marks: 2 (Budgeted Time 4 Min)

Network operator needs a temporary virtual circuit for his network. Which type of ATM virtual circuit is most appropriate in this situation?

Answer (Please click here to Add Answer)

Made By: Waqar Siddhu

Question No : 22 of 26 Marks: 2 (Budgeted Time 4 Min)

Defaults routes are used in networks. You are required to write two benefits of using default route.

Answer (Please click here to Add Answer)

Made By: Waqar Siddhu

Question No : 23 of 26 Marks: 3 (Budgeted Time 6 Min)

ATM provides the best support for multiple services. Due to which reasons ATM is not adopted as a single underline technology? Give any three reasons to justify your answer.

Answer (Please click here to Add Answer)

Normal Arial 12 100%

Made By: Waqar Siddhu

Question No : 24 of 26 Marks: 3 (Budgeted Time 6 Min)

If a packet switch does not check header's source information then how it can be beneficial for routing? Write any three benefits.

Answer (Please click here to Add Answer)

Normal Arial 12 100%

Made By: Waqar Siddhu

Question No : 25 of 26 Marks: 5 (Budgeted Time 10 Min)

Suppose, as a Network Administrator of XYZ organization you are given a task to develop a network in a limited area with low cost, then which wiring scheme will you use? Justify your answer with four solid reasons.

Answer (Please click here to Add Answer)

Made By: Waqar Siddhu

Question No : 26 of 26 Marks: 5 (Budgeted Time 10 Min)

Suppose there are two networks A and B both using virtual private network. If a user of some another network other than the network B wants to send some packets to a device in network A, then what will be the behavior of network A? Give three reasons behind its behavior.

Answer (Please click here to Add Answer)

Normal Arial 12 100%

Made By: Waqar Siddhu

Network operator needs a temporary virtual circuit for his network. Which type of ATM virtual circuit is most appropriate in this situation?

Answer (Please click here to Add Answer)

Normal | Arial | 12 | 100%

Start Time: 11:16 AM

21

Made By: Waqar Siddhu

Describe two major components of thick Ethernet.

Answer (Please click here to Add Answer)

Normal | Arial | 12 | 100%

Start Time: 11:16 AM

22

Made By: Waqar Siddhu

If a packet switch does not check header's source information then how it can be beneficial for routing? Write any three benefits.

Answer (Please click here to Add Answer)

Normal Arial 12 100%

Start Time: 11:16 AM

23

Made By: Waqar Siddhu

Is it necessary to use terminator at both ends of thin Ethernet cable? Give your answer with at least two reasons.

Answer (Please click here to Add Answer)

Normal | Arial | 12 | 100%

Start Time: 11:16 AM

24

Made By: Waqar Siddhu

Suppose, as a Network Administrator of XYZ organization you are given a task to develop a network in a limited area with low cost, then which wiring scheme will you use? Justify your answer with four solid reasons.

Answer (Please click here to Add Answer)

Normal | Arial | 12 | 100%

Start Time: 11:16 AM

25

Made By: Waqar Siddhu

Star textile has multiple LANs with packet switches. It is required that if any link goes down/breakup, the entire network traffic should arrive to respective destination smoothly. Which routing method will meet this requirement? Give at least three reasons to support your answer.

Answer (Please click here to Add Answer)

100%

Normal Arial 12

Start Time: 11:16 AM

26

Made By: Waqar Siddhu

Question No : 21 of 26 Marks: 2 (Budgeted Time 4 Min)

Network operator needs a temporary virtual circuit for his network. Which type of ATM virtual circuit is most appropriate in this situation?

Answer (Please click here to Add Answer)

Made By: Waqar Siddhu

Question No : 22 of 26 Marks: 2 (Budgeted Time 4 Min)

How many methods are available to span a bridge network over long distances? Just write their names.

Answer (Please click here to Add Answer)

Made By: Waqar Siddhu

Question No : 23 of 26 Marks: 3 (Budgeted Time 6 Min)

Suppose in university campus, bridges are used in its local area network. Explain all steps, how bridge builds up addresses list table of all attached computers?

Answer (Please click here to Add Answer)

Normal Arial 12 100%

Made By: Waqar Siddhu

Question No : 24 of 26 Marks: 3 (Budgeted Time 6 Min)

Suppose XYZ Company has packet switch network of 50 computers. After some time of communication, network administrator observes that the packets in the packet switches are facing some delay just before these are transmitted over the link. Identify this delay and write down the mathematical equation of the relationship between delay and throughput.

Answer (Please click here to Add Answer)

Normal Arial 12 100%

Made By: Waqar Siddhu

Question No : 25 of 26 Marks: 5 (Budgeted Time 10 Min)

While designing the ATM technology why the designers of the ATM have chosen cells over packets which are being used widely? Give five reasons to support your answer.

Answer (Please click here to Add Answer)

Normal Arial 12 100%

Made By: Waqar Siddhu

Question No : 26 of 26 Marks: 5 (Budgeted Time 10 Min)

Suppose you are assigned to connect two site offices which are situated far away from each other. In your opinion, which one will be the appropriate solution for this, LAN extension or WAN? Justify your answer with four reasons.

Answer (Please click here to Add Answer)

Normal Arial 12 100%

Made By: Waqar Siddhu

Network operator needs a temporary virtual circuit for his network. Which type of ATM virtual circuit is most appropriate in this situation?

Answer (Please click here to Add Answer)

Normal | Arial | 12 | 100%

Start Time: 11:16 AM

21

Made By: Waqar Siddhu

Describe two major components of thick Ethernet.

Answer (Please click here to Add Answer)

Normal | Arial | 12 | 100%

Start Time: 11:16 AM

22

Made By: Waqar Siddhu

If a packet switch does not check header's source information then how it can be beneficial for routing? Write any three benefits.

Answer (Please click here to Add Answer)

Normal Arial 12 100%

Start Time: 11:16 AM

23

Made By: Waqar Siddhu

Is it necessary to use terminator at both ends of thin Ethernet cable? Give your answer with at least two reasons.

Answer (Please click here to Add Answer)

Normal | Arial | 12 | 100%

Start Time: 11:16 AM

24

Made By: Waqar Siddhu

Suppose, as a Network Administrator of XYZ organization you are given a task to develop a network in a limited area with low cost, then which wiring scheme will you use? Justify your answer with four solid reasons.

Answer (Please click here to Add Answer)

Normal | Arial | 12 | 100%

Start Time: 11:16 AM

25

Made By: Waqar Siddhu

Star textile has multiple LANs with packet switches. It is required that if any link goes down/breakup, the entire network traffic should arrive to respective destination smoothly. Which routing method will meet this requirement? Give at least three reasons to support your answer.

Answer (Please click here to Add Answer)

100%

Normal Arial 12

Start Time: 11:16 AM

26

Made By: Waqar Siddhu

Question No : 21 of 26 Marks: 2 (Budgeted Time 4 Min)

A local telephone company wants to connect the LANs in all its offices throughout a city. For this case which network category would be used?

Answer (Please click here to Add Answer)

Made By: Waqar Siddhu

Question No : 22 of 26 Marks: 2 (Budgeted Time 4 Min)

As you know ATM network specifies a 24 bits VPI/VCI connection identifier, how many bits VPI and VCI occupies individually?

Answer (Please click here to Add Answer)

Normal Arial 12 100%

Made By: Waqar Siddhu

Question No : 23 of 26 Marks: 3 (Budgeted Time 6 Min)

ATM provides the best support for multiple services. Due to which reasons ATM is not adopted as a single underline technology? Give any three reasons to justify your answer.

Answer (Please click here to Add Answer)

Normal Arial 12 100%

Made By: Waqar Siddhu

Question No : 24 of 26 Marks: 3 (Budgeted Time 6 Min)

Is it necessary to use terminator at both ends of thin Ethernet cable? Give your answer with at least two reasons.

Answer (Please click here to Add Answer)

100%

Normal Arial 12

Made By: Waqar Siddhu

Question No : 25 of 26 Marks: 5 (Budgeted Time 10 Min)

Suppose, as a Network Administrator of XYZ organization you are given a task to develop a network in a limited area with low cost, then which wiring scheme will you use? Justify your answer with four solid reasons.

Answer (Please click here to Add Answer)

Normal Arial 12 100%

Made By: Waqar Siddhu

Question No : 26 of 26 Marks: 5 (Budgeted Time 10 Min)

Suppose there are two networks A and B both using virtual private network. If a user of some another network other than the network B wants to send some packets to a device in network A, then what will be the behavior of network A? Give three reasons behind its behavior.

Answer (Please click here to Add Answer)

Normal Arial 12 100%

Made By: Waqar Siddhu

Question No : 21 of 26 Marks: 2 (Budgeted Time 4 Min)

Network operator needs a temporary virtual circuit for his network. Which type of ATM virtual circuit is most appropriate in this situation?

Answer (Please click here to Add Answer)

Made By: Waqar Siddhu

Question No : 22 of 26 Marks: 2 (Budgeted Time 4 Min)

How many methods are available to span a bridge network over long distances? Just write their names.

Answer (Please click here to Add Answer)

Made By: Waqar Siddhu

Question No : 23 of 26 Marks: 3 (Budgeted Time 6 Min)

Suppose in university campus, bridges are used in its local area network. Explain all steps, how bridge builds up addresses list table of all attached computers?

Answer (Please click here to Add Answer)

Normal Arial 12 100%

Made By: Waqar Siddhu

Question No : 24 of 26 Marks: 3 (Budgeted Time 6 Min)

Suppose XYZ Company has packet switch network of 50 computers. After some time of communication, network administrator observes that the packets in the packet switches are facing some delay just before these are transmitted over the link. Identify this delay and write down the mathematical equation of the relationship between delay and throughput.

Answer (Please click here to Add Answer)

Normal Arial 12 100%

Made By: Waqar Siddhu

Question No : 25 of 26 Marks: 5 (Budgeted Time 10 Min)

While designing the ATM technology why the designers of the ATM have chosen cells over packets which are being used widely? Give five reasons to support your answer.

Answer (Please click here to Add Answer)

Normal Arial 12 100%

Made By: Waqar Siddhu

Question No : 26 of 26 Marks: 5 (Budgeted Time 10 Min)

Suppose you are assigned to connect two site offices which are situated far away from each other. In your opinion, which one will be the appropriate solution for this, LAN extension or WAN? Justify your answer with four reasons.

Answer (Please click here to Add Answer)

Normal Arial 12 100%

Made By: Waqar Siddhu